FZH series

Maximum working pressure up to 70 Mpa (700 bar) - Flow rate up to 80 l/min

INSTALLATION, SERVICE AND MAINTENANCE MANUAL AND SAFETY INSTRUCTIONS

Please scan the QR codes
to get updated electronic version
of the related document.

TYPICAL FILTER SIZING Selection Software

Step 1

Select “FILTER SIZING SOFTWARE” after login

OR

Select “FILTER SIZING” after login from a product page

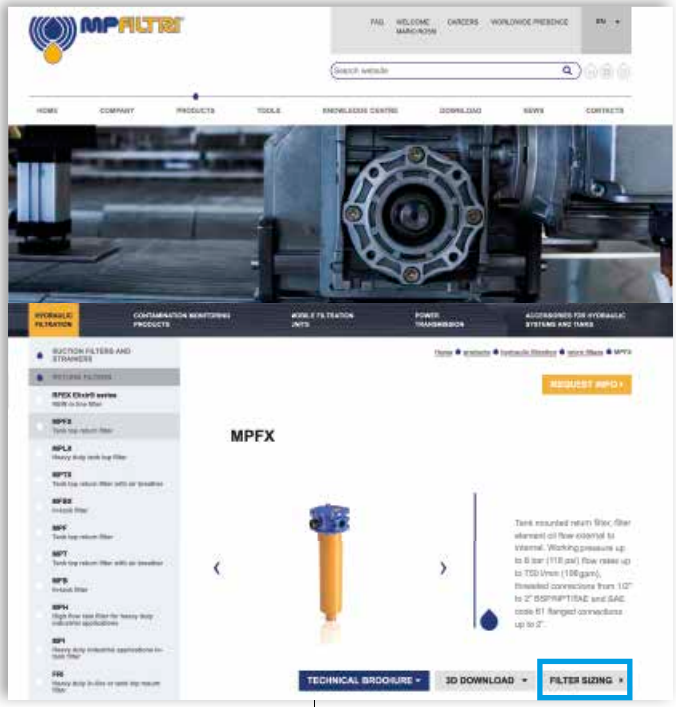

Step 2

Choose the type of filter family.
Enter the main data for sizing the filter then push CALCULATE.

Enter the main data for sizing the filter then push CALCULATE.

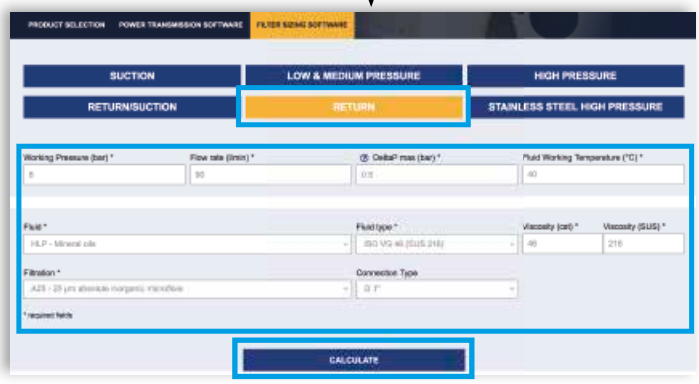

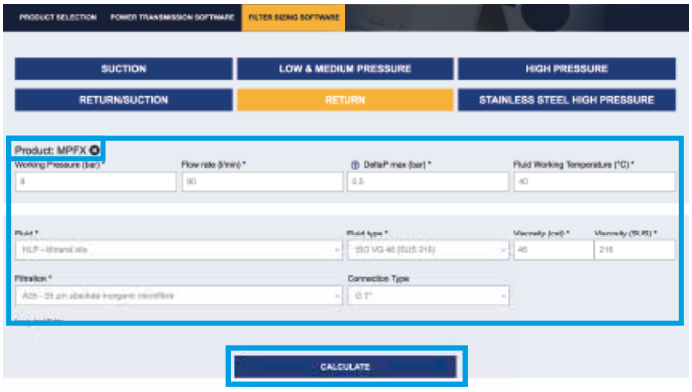

Step 3

Select the desidered options to choose the appropriate filter type for the application.

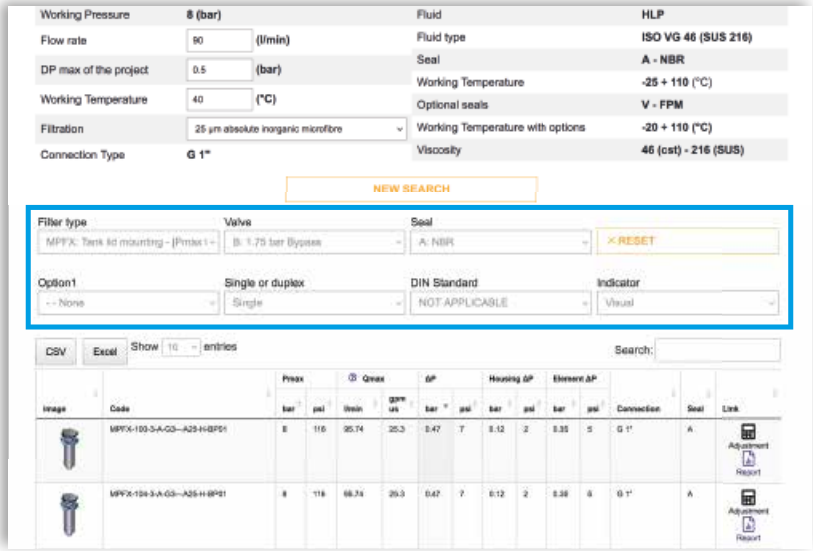

Step 4

Choose the most suitable filter from the proposed list.

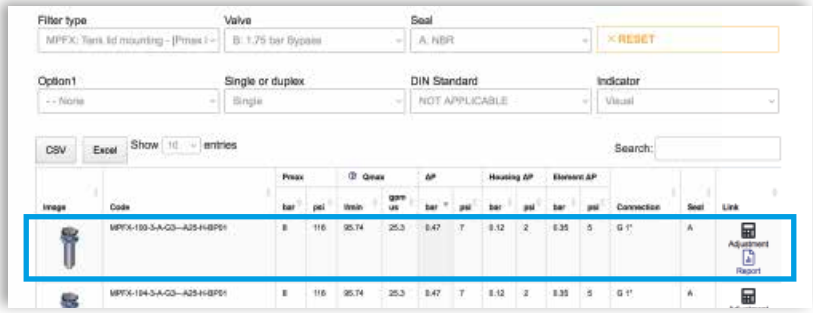

Step 5

A SAVE YOUR FILTER'S REPORT

B MANUAL EDIT

It is possible to change the filter modifying every parameter.

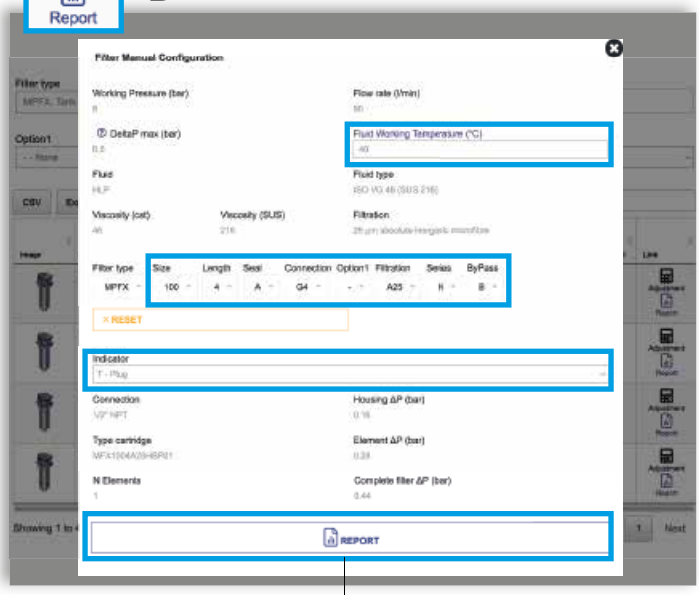

SAVE IN YOUR ARCHIVE
typing your reference data and then SAVE AS PDF

A new browser window displays the pdf

see **A**

Close the report window

By clicking your WELCOME button, the SHOW REPORTS is displayed: select it to see your filters list.

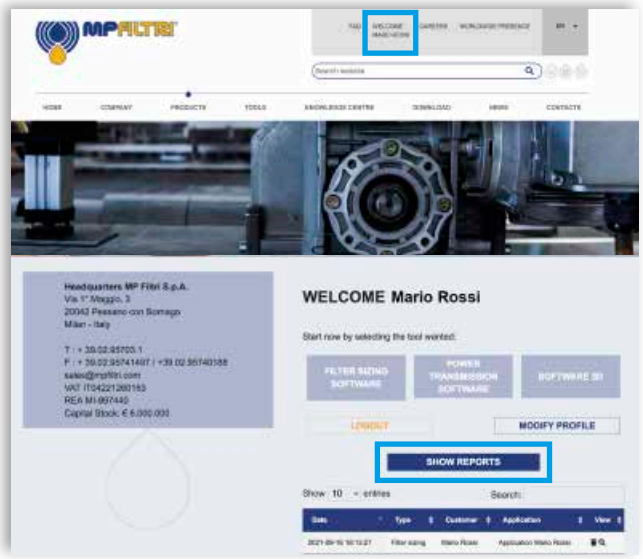

FZH GENERAL INFORMATION

Description

Filters for potentially explosive atmosphere

In-line
Maximum working pressure up to 80 Mpa (700 bar)
Flow rate up to 80 l/min

FZH is a range of stainless steel high pressure filter for protection of sensitive components in high pressure hydraulic systems placed in difficult environmental conditions.
They are directly connected to the lines of the system through the hydraulic fittings.

Available features:

- 1/2" female threaded connections, for a maximum flow rate of 80 l/min
- Fine filtration rating, to get a good cleanliness level into the system
- Bypass valve, to relieve excessive pressure drop across the filter media
- Low collapse filter element "N", for use with filters provided with bypass valve
- High collapse filter element "H", for use with filters not provided with bypass valve
- Low collapse filter element with external support "R", for filter element protection against the back pressure caused by the check valve or the reverse flow in filters provided with the bypass valve
- High collapse filter element with external support "S", for filter element protection against the back pressure caused by the check valve or the reverse flow in filters not provided with the bypass valve
- High collapse filter element "U", for use with aggressive fluids
- Visual, electrical and electronic differential clogging indicators

Common applications:

- Off-shore equipment
- Water filtration systems
- Systems with strong or corrosive environmental conditions
- Systems with corrosive fluids

Technical data

Filter housing materials

- Head: AISI 316L
- Housing: AISI 316L
- Bypass valve: AISI 316L

Seals

- Standard NBR
  series A (-25 °C to +110 °C)
- Optional FPM
  series V (-20 °C to +120 °C)
- Optional MFQ
  series F (-50 °C to +120 °C)

Bypass valve

Opening pressure 6 bar ±10%

Temperature

From -50 °C to +120 °C

Note

FZH filters are provided for vertical mounting

Δp element type

Fluid flow through the filter element from OUT to IN

Microfibre filter elements - series N-R: 20 bar.
Element series "N - R":
- End cap: Polyamide
- Core tube: Tinned steel
- External/Internal support: Wire mesh Epox painted
- Media/Support/Pre-filter: Microfibre/Syntetic

Microfibre filter elements - series H-S: 210 bar.
Element series "H - S":
- End cap: Tinned steel
- Core tube: Tinned steel
- External support: Wire mesh Epox painted
- Internal support: Wire mesh Stainless steel
- Media/Support/Pre-filter: Microfibre/Syntetic

Stainless Steel Microfibre filter elements series U: 210 bar.
Element series "U":
- End cap: Stainless steel
- Core tube: Stainless steel
- External support: Stainless steel
- Internal support: Stainless steel
- Media/Support/Pre-filter: Microfibre/Syntetic

Filter with:

NBR seal in configuration zerospark®

II 3G Ex h IIC T6 Gc X
II 3D Ex h IIIC T85°C Dc X
T_{amb} : -15ºC ÷ +80ºC, $T_{max\ fluid}$ +80ºC

FPM / MFQ seal in configuration zerospark®

II 3G Ex h IIC T6... T4 Gc X
II 3D Ex h IIIC T85°C...T115°C Dc X
T_{amb} : -15ºC ÷ +110ºC, $T_{max\ fluid}$ +110ºC

Weights [kg] and volumes [dm³]

Filter series	Weights [kg]					Volumes [dm³]				
	Length	1	2	3	4	Length	1	2	3	4
FZH 012		2.1	2.2	2.7	3.3		0.10	0.12	0.15	0.20
FZH 040		-	4.5	5.1	5.6		-	0.19	0.26	0.34

FILTER ASSEMBLY SIZING
Flow rates [l/min]

		Filter element design - R Series					Filter element design - S-U Series				
Filter series	Length	A03	A06	A10	A16	A25	A03	A06	A10	A16	A25
FZH 012	1	4	6	8	9	11	3	5	6	7	9
	2	7	9	17	21	28	5	7	14	17	24
	3	11	14	26	30	37	11	14	25	29	36
	4	17	21	32	36	40	12	16	28	32	38
FZH 040	2	19	25	43	50	59	19	23	41	45	55
	3	34	37	53	62	74	31	34	48	52	66
	4	42	46	63	72	81	38	41	55	71	78

Maximum flow rate for a complete stainless steel high pressure filter with a pressure drop Δp = 1.5 bar.
The reference fluid has a kinematic viscosity of 30 mm^2/s (cSt) and a density of 0.86 kg/dm^3.
For different pressure drop or fluid viscosity we recommend to use our selection software available on www.mpfiltri.com.
You can also calculate the right size using the formulas present on the FILTER SIZING paragraph at the beginning of the full catalogue or at the beginning of the filter family brochure.
Please, contact our Sales Department for further additional information.

Hydraulic symbols

Filter series	Style S	Style B	Style T	Style D	Style V	Style Z
FZH 012	•	•	-	-	•	•
FZH 040	•	•	•	•	•	•

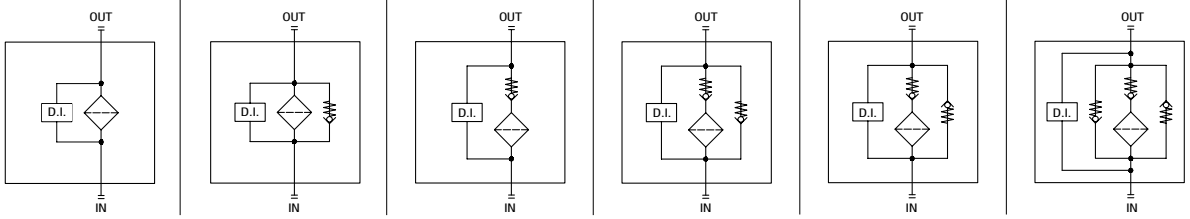

Pressure drop

Filter housings Δp pressure drop

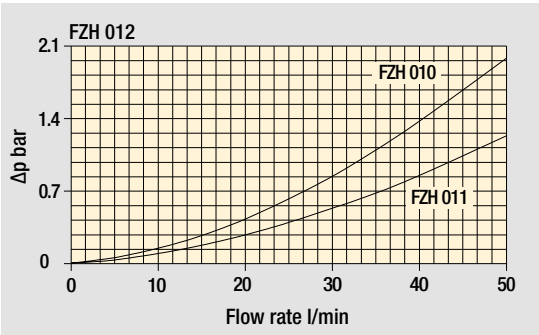

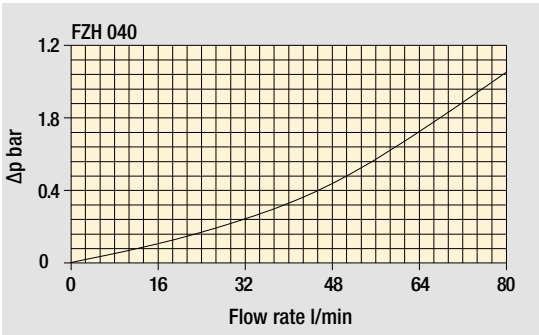

The curves are plotted using mineral oil with density of 0.86 kg/dm^3 in compliance with ISO 3968. Δp varies proportionally with density.

Designation & Ordering code

COMPLETE FILTER

Configuration example: FZH012 | 2 | B | F | B | 2 | A03 | U | Z01 | EX

Filter Series and size
FZH012

Filter length
1 | 2 | 3 | 4 |

Valves
- **S** Without bypass
- **B** With bypass 6 bar
- **V** With reverse flow, without bypass
- **Z** With reverse flow, with bypass 6 bar

Seals
- **A** NBR
- **V** FPM
- **F** MFQ

Connections
- **A** G 1/4”
- **B** 1/4” NPT
- **C** SAE 5 - 1/2” - 20 UNF
- **D** G 3/8”
- **E** 3/8” NPT
- **F** SAE 6 - 9/16” - 18 UNF

Connection for differential indicator
- **1** Without connection
- **2** With connection

Filtration rating (filter media)

A03	Inorganic microfiber	3 µm
A06	Inorganic microfiber	6 µm
A10	Inorganic microfiber	10 µm
A16	Inorganic microfiber	16 µm
A25	Inorganic microfiber	25 µm

Element Δp		Valves S	B	V	Z
N	20 bar	-	•	-	•
H	210 bar	•	-	•	-
U	210 bar stainless steel filter element	•	•	•	•

Execution
zerospark
- **Z01** MP Filtri standard
- **Zxx** Customized

Certifications
- **EX** ATEX certifications

FILTER ELEMENT

Configuration example: HP011 | 2 | A03 | F | U | Z01

Element series and size
HP011

Element length
1 | 2 | 3 | 4 |

Filtration rating (filter media)

A03	Inorganic microfiber	3 µm
A06	Inorganic microfiber	6 µm
A10	Inorganic microfiber	10 µm
A16	Inorganic microfiber	16 µm
A25	Inorganic microfiber	25 µm

Seals
- **A** NBR
- **V** FPM
- **F** MFQ

Element Δp
- **N** 20 bar
- **H** 210 bar
- **U** 210 bar, stainless steel filter element

Execution
zerospark
- **Z01** MP Filtri standard
- **Zxx** Customized

CLOGGING INDICATORS

See page 729

- **DVZ** Visual differential indicator
- **X3** Plug

FZH012	
Filter length	**H [mm]**
1	93
2	104
3	154
4	204

Connections	R
A	M6
B - C	1/4" UNC
D	M6
E - F	1/4" UNC

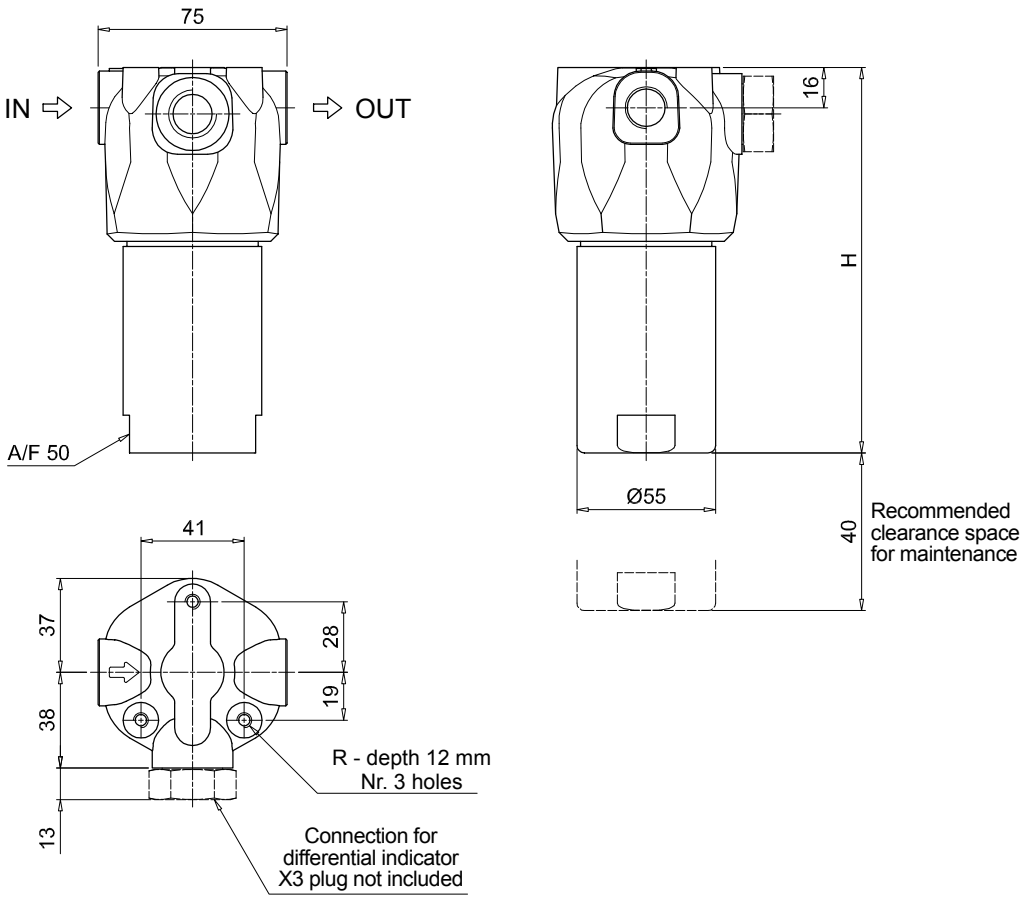

Designation & Ordering code

COMPLETE FILTER

Configuration example: FZH040 | 2 | T | A | A | 2 | A03 | S | Z01 | EX

Filter Series and size

FZH040

Filter length

2 | **3** | **4**

Valves

S	Without bypass
B	With bypass 6 bar
T	With check valve, without bypass
D	With check valve, with bypass 6 bar
V	With reverse flow, without bypass
Z	With reverse flow, with bypass 6 bar

Seals

A	NBR	**E**	EPDM
V	FPM	**F**	MFQ

Connections

A	G 1/2”
B	1/2” NPT
C	SAE 8 - 3/4” - 16 UNF

Connection for differential indicator

1	Without connection
2	With connection

Filtration rating (filter media)

A03	Inorganic microfiber	3 µm
A06	Inorganic microfiber	6 µm
A10	Inorganic microfiber	10 µm
A16	Inorganic microfiber	16 µm
A25	Inorganic microfiber	25 µm

Element Δp		Valves S	B	T	D	V	Z
R	20 bar	-	•	-	•	-	•
S	210 bar	•	-	•	-	•	-
U	210 bar, stainless steel filter element	•	•	•	•	•	•

Execution

zerospark

Z01	MP Filtri standard
Zxx	Customized

Certifications

EX	ATEX certifications

FILTER ELEMENT

Configuration example: HP039 | 2 | A03 | A | S | Z01

Element series and size

HP039

Element length

2 | **3** | **4**

Filtration rating (filter media)

A03	Inorganic microfiber	3 µm
A06	Inorganic microfiber	6 µm
A10	Inorganic microfiber	10 µm
A16	Inorganic microfiber	16 µm
A25	Inorganic microfiber	25 µm

Seals

A	NBR
V	FPM
F	MFQ

Element Δp

R	20 bar
S	210 bar
U	210 bar, stainless steel filter element

Execution

zerospark

Z01	MP Filtri standard
Zxx	Customized

CLOGGING INDICATORS

See page 729

DVZ	Visual differential indicator	**X3**	Plug

Dimensions

FZH040	
Filter length	**H [mm]**
2	204
3	247
4	291

Connections	R
A	M10
B	3/8" UNC
C	3/8" UNC

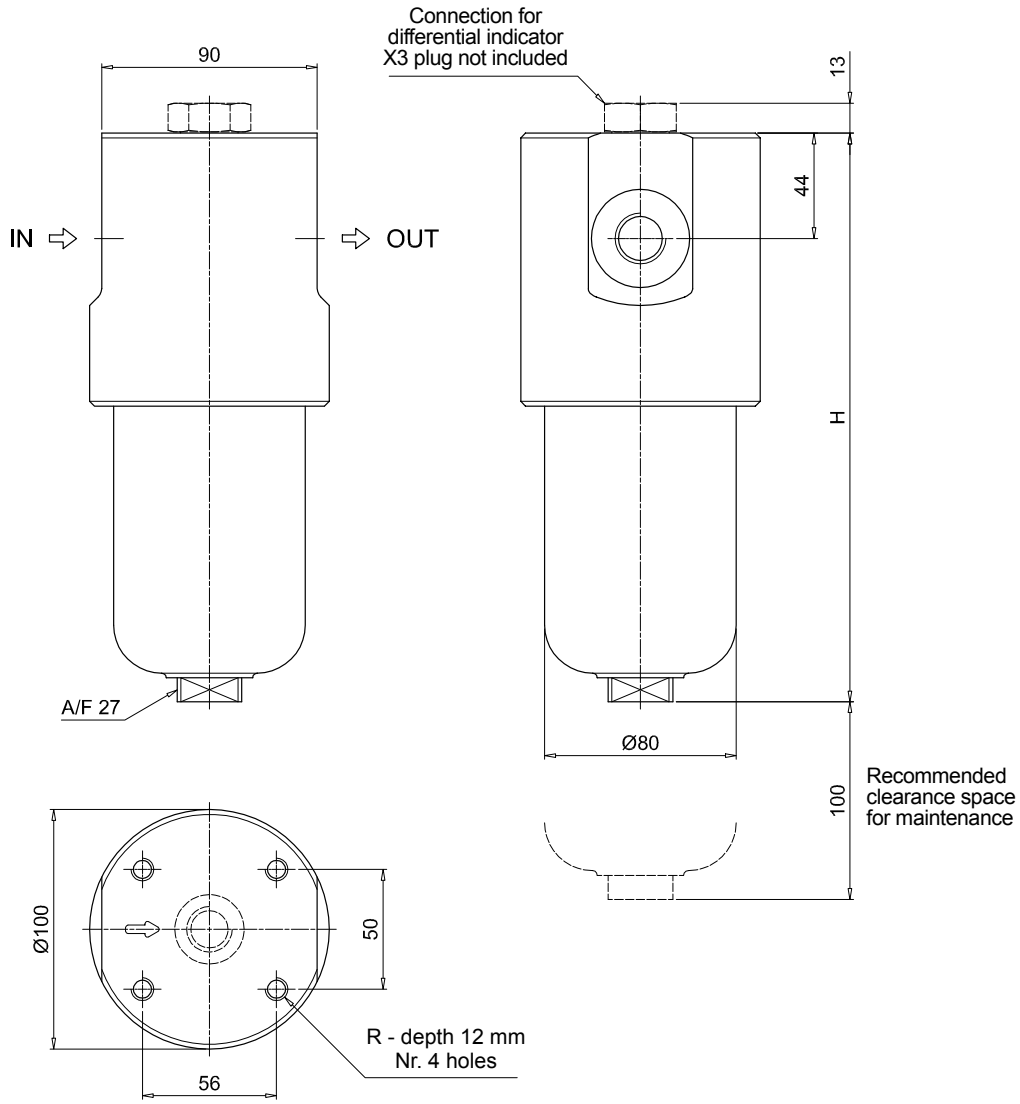

FZH SPARE PARTS

Order number for spare parts

FZH 012

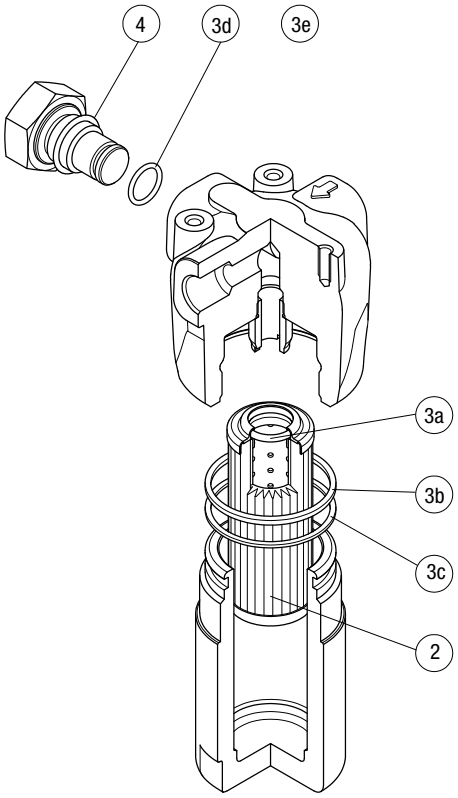

FZH 040

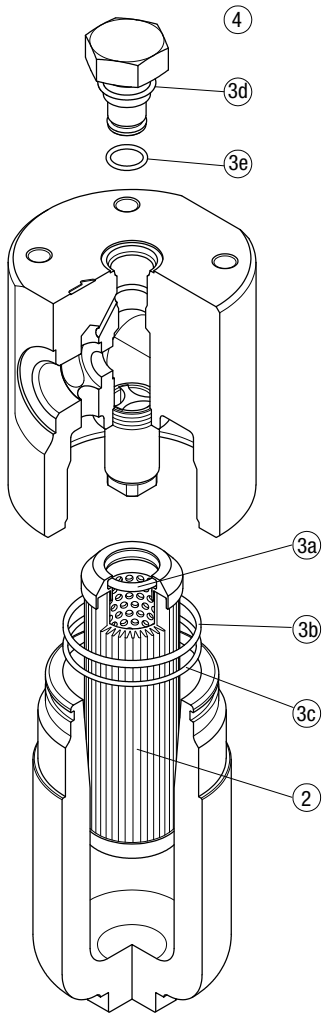

Item:	Q.ty: 1 pc. 2	Q.ty: 1 pc. 3 (3a ÷ 3e)		Q.ty: 1 pc. 4	
Filter series	**Filter element**	**Seal Kit code number NBR**	**FPM**	**Indicator connection plug NBR**	**FPM**
FZH 012	See order table	02050856	02050857	X2H	X2V
FZH 040		02050860	02050861		

Clogging indicators

Introduction

Filter elements are efficient only if their Dirt Holding Capacity is fully exploited. This is achieved by using filter housings equipped with clogging indicators.

These devices trip when the clogging of the filter element causes an increase in pressure drop across the filter element.

The indicator is set to alarm before the element becomes fully clogged.

MP Filtri can supply indicators of the following designs:

- **Vacuum switches and gauges**
- **Pressure switches and gauges**
- **Differential pressure indicators**

These type of devices can be provided with a visual, electrical or both signals.

Suitable indicator types

DIFFERENTIAL INDICATORS

Differential indicators are used on the Pressure line to check the efficiency of the filter element. They measure the pressure upstream and downstream of the filter element (differential pressure).
Standard items are produced with special connection G 1/2" size.
Also available in Stainless Steel models.

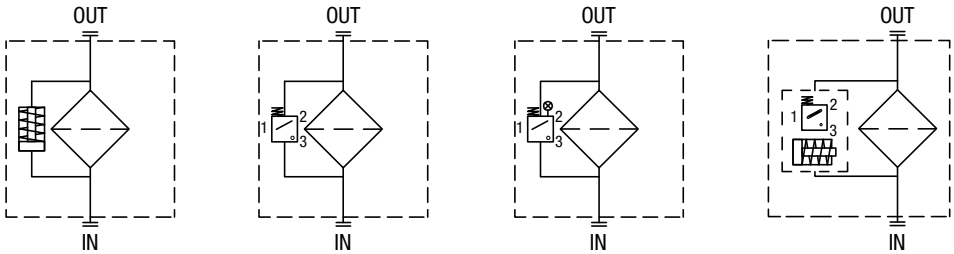

Quick reference guide

Filter family	Filter series		Visual indicators	Electrical indicators	Electrical / Visual indicators
FILTERS FOR POTENTIALLY EXPLOSIVE ATMOSPHERE	With bypass valve 6 bar	FMMX 50 FMM 050 -150	DVA50xP01 DVM50xP01	DEH50xA48P01 DEH50xA49P01 DEH50xA70P01	
	Without bypass valve	FMMX 50 FMM 050 -150	DVA70xP01 DVA95xP01 DVM70xP01 DVM95xP01	DEH70xA48P01 DEH70xA49P01 DEH70xA70P01 DEH95xA48P01 DEH95xA49P01 DEH95xA70P01	
	With bypass valve 6 bar	FZP 039 - 136	DVX50xP01 DVY50xP01	DEH50xA48P01 DEH50xA49P01 DEH50xA70P01 DEX50xA50P01 DEZ50xA50P01	
	Without bypass valve	FZP 039 - 136	DVX70xP01 DVX95xP01 DVY70xP01 DVY95xP01	DEH70xA48P01 DEH70xA49P01 DEH70xA70P01 DEH95xA48P01 DEH95xA49P01 DEH95xA70P01 DEX70xA50P01 DEZ70xA50P01 DEZ95xA50P01	
	With bypass valve 6 bar	FZH 012 - 040	DVZ50xP01		
	Without bypass valve	FZH 012 - 040	DVZ70xP01 DVZ95xP01		

Dimensions

BEA*50

Electrical Pressure Indicator

Settings	Ordering code
1.5 bar ±10%	BE A 15 H A 50 P01
2.0 bar ±10%	BE A 20 H A 50 P01

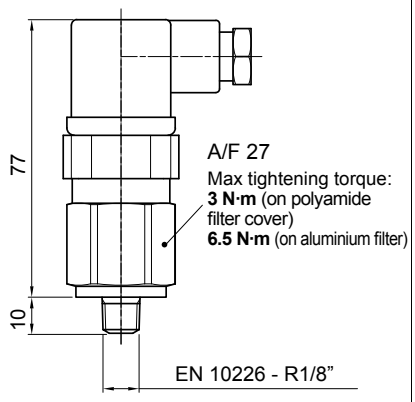

Hydraulic symbol

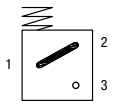

Electrical symbol

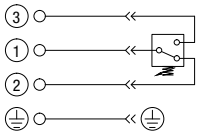

Materials
- Body: Brass
- Base: Black polyamide
- Contacts: Silver
- Seal: HNBR

Technical data
- Max working pressure: 40 bar
- Proof pressure: 60 bar
- Working temperature: From -25 °C to +80 °C
- Compatibility with fluids: Mineral oils, Synthetic fluids HFA, HFB, HFC according to ISO 2943
- Degree of protection: IP65 according to EN 60529

Electrical data
- Electrical connection: EN 175301-803
- Resistive load: 5 A / 14 Vdc; 4 A / 30 Vdc; 5 A / 125 Vac; 4 A / 250 Vac
- Available ATEX product: I M1 Ex ia I Ma; II 1GD Ex ia IIC TX Ga Ex ia IIIC TX °C Da
- CE certification

DEH*48

Electrical Differential Indicator

Settings	Ordering code
5.0 bar ±10%	DE H 50 x A 48 P01
7.0 bar ±10%	DE H 70 x A 48 P01

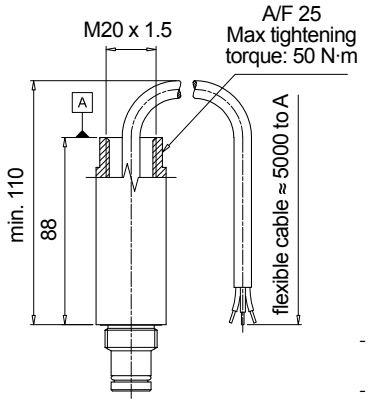

Hydraulic symbol

Electrical symbol

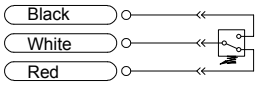

- Certification / Approvals: ATEX, IECEx, EAC TR CU, INMETRO
- Certification included as standard

Materials
- Body: AISI 316L
- Contacts: Rhodium
- Seal: FPM - MFQ

Technical data
- Max working pressure: 420 bar
- Proof pressure: 630 bar
- Burst pressure: 1260 bar
- Working temperature: From -60 °C to +125 °C
- Compatibility with fluids: Mineral oils, Synthetic fluids HFA, HFB, HFC according to ISO 2943
- Temperature class: T4 (135 °C) and T6 (85 °C)
- Degree of protection: IP 66/67/68 according to EN 60529
- Connection type: Three-core cable, fitting M20x1.5
- Contact type: SPCO/SPDT (Hermetically sealed - Volt-free contacts)

Electrical data
- Resistive Load: 830 mA / 24 Vdc - 180 mA / 110 Vac
- Electrical Ratings: Ui = 30 Vdc / Ii = 250 mA / Pi = 1.3 W
- Available ATEX product: II 1 GD Ex ia IIC T6 Ga -60°C ≤ Ta ≤ 80°C; Ex ia IIC T4 Ga -60°C ≤ Ta ≤ 125°C; II 2 GD Ex db IIC T6* Gb Ex tb IIIC T85°C* Db (Tamb : = -60°C to +70°C)* IP66/67; * alternative T/Class and ambients T4, T135°C (Tamb = -60°C to +120°C)

DEH*49

Electrical Differential Indicator

Settings	Ordering code
5.0 bar ±10%	DE H 50 x A 49 P01
7.0 bar ±10%	DE H 70 x A 49 P01

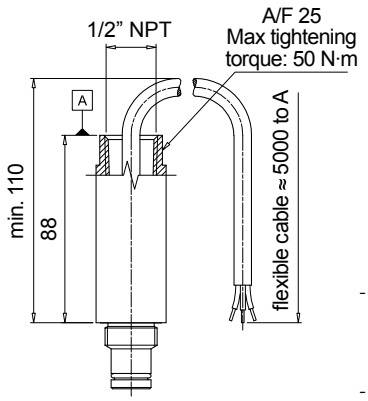

Hydraulic symbol

Electrical symbol

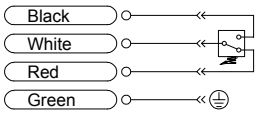

- Certification / Approvals: ATEX, IECEx, EAC TR CU, INMETRO, UL/CSA Class I Division 1 Groups A-D, UL/CSA Class II Division 1 Groups E-G
- Certification included as standard

Materials
- Body: AISI 316L
- Contacts: Rhodium
- Seal: FPM - MFQ

Technical data
- Max working pressure: 420 bar
- Proof pressure: 630 bar
- Burst pressure: 1260 bar
- Working temperature: From -60 °C to +120 °C : ATEX, IECEx, EAC TR CU, INMETRO; From -60 °C to +105 °C : UL/CSA
- Compatibility with fluids: Mineral oils, Synthetic fluids HFA, HFB, HFC according to ISO 2943
- Temperature class: T4 (135 °C) and T6 (85 °C)
- Degree of protection: IP 66/67/68 according to EN 60529
- Connection type: Four-core cable, fitting 1/2” NPT
- Contact type: SPCO/SPDT (Hermetically sealed - Volt-free contacts)

Electrical data
- Resistive Load: 830 mA / 24 Vdc - 180 mA / 110 Vac
- Max voltage 150 Vac/dc
- Power 20 W
- Available ATEX product: II 1 GD Ex ia IIC T6 Ga -60°C ≤ Ta ≤ 80°C; Ex ia IIC T4 Ga -60°C ≤ Ta ≤ 125°C; II 2 GD Ex db IIC T6* Gb Ex tb IIIC T85°C* Db (Tamb : = -60°C to +70°C)* IP66/67; * alternative T/Class and ambients T4, T135°C (Tamb = -60°C to +120°C)

DEH*70

Electrical Differential Indicator

Settings	Ordering code
5.0 bar ±10%	DE H 50 x A 70 P01
7.0 bar ±10%	DE H 70 x A 70 P01

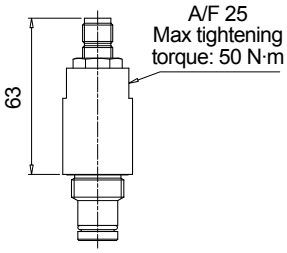

Hydraulic symbol

Electrical symbol

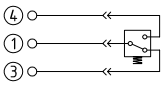

- Certification / Approvals:
  ATEX, IECEx, EAC TR CU, INMETRO
- Certification included as standard

Materials
- Body: AISI 316L with internal engineered resin switch
- Contacts: Rhodium
- Seal: FPM - MFQ

Technical data
- Max working pressure: 420 bar
- Proof pressure: 630 bar
- Burst pressure: 1260 bar
- Working temperature: From -60 °C to +80 °C
- Compatibility with fluids: Mineral oils, Synthetic fluids HFA, HFB, HFC according to ISO 2943
- Temperature class: T6 (85 °C)
- Degree of protection: IP 66/67 according to EN 60529
- Connection type: IEC 61076-2-101 D (M12)
- Contact type: SPCO/SPDT (Hermetically sealed - Volt-free contacts)

Electrical data
- Resistive Load: 830 mA / 24 Vdc - 180 mA / 110 Vdc
- Electrical Ratings: Ui = 30 Vdc
  Ii = 250 mA
  Pi = 1.3 W
- Available ATEX product: II 1 GD Ex ia IIC T6 Ga -60°C ≤ Ta ≤ 80°C
  Ex ia IIC T4 Ga -60°C ≤ Ta ≤ 125°C
  II 2 GD Ex db IIC T6* Gb Ex tb IIIC T85°C* Db
  (Tamb : = -60°C to +70°C)* IP66/67
  * alternative T/Class and ambients T4, T135°C
  (Tamb = -60°C to +120°C)

DVA

Visual Differential Indicator

Settings	Ordering code
5.0 bar ±10%	DV A 50 x P01
7.0 bar ±10%	DV A 70 x P01
9.5 bar ±10%	DV A 95 x P01

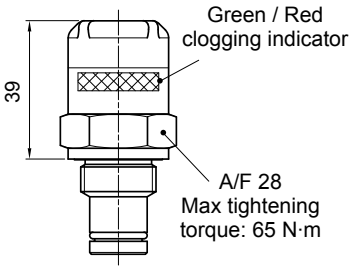

Hydraulic symbol

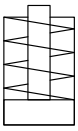

Materials
- Body: Brass
- Internal parts: Brass - Polyamide
- Contacts: Silver
- Seal: HNBR - FPM

Technical data
- Reset: Automatic reset
- Max working pressure: 420 bar
- Proof pressure: 630 bar
- Burst pressure: 1260 bar
- Working temperature: From -25 °C to +110 °C
- Compatibility with fluids: Mineral oils, Synthetic fluids HFA, HFB, HFC according to ISO 2943
- Degree protection: IP65 according to EN 60529

DVM

Visual Differential Indicator

Settings	Ordering code
5.0 bar ±10%	DV M 50 x P01
7.0 bar ±10%	DV M 70 x P01
9.5 bar ±10%	DV M 95 x P01

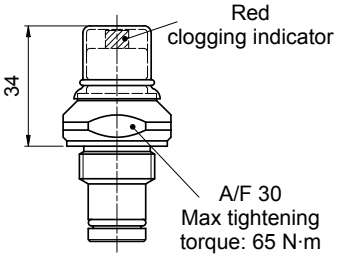

Hydraulic symbol

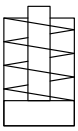

Materials
- Body: Brass
- Internal parts: Brass - Polyamide
- Contacts: Silver
- Seal: HNBR - FPM

Technical data
- Reset: Manual reset
- Max working pressure: 420 bar
- Proof pressure: 630 bar
- Burst pressure: 1260 bar
- Working temperature: From -25 °C to +110 °C
- Compatibility with fluids: Mineral oils, Synthetic fluids HFA, HFB, HFC according to ISO 2943
- Degree protection: IP65 according to EN 60529

Dimensions

DVX

Visual Differential Indicator

Settings	Ordering code
5.0 bar ±10%	DV X 50 x P01
7.0 bar ±10%	DV X 70 x P01
9.5 bar ±10%	DV X 95 x P01

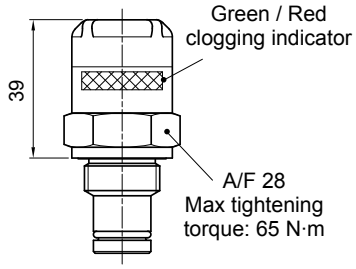

Hydraulic symbol

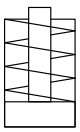

Materials
- Body: AISI 316L
- Internal parts: AISI 316L - Polyamide
- Contacts: Silver
- Seal: HNBR - MFQ

Technical data
- Reset: Automatic reset
- Max working pressure: 420 bar
- Proof pressure: 630 bar
- Burst pressure: 1260 bar
- Working temperature: From -25 °C to +110 °C
- Compatibility with fluids: Mineral oils, Synthetic fluids HFA, HFB, HFC according to ISO 2943
- Degree protection: IP65 according to EN 60529

DVY

Visual Differential Indicator

Settings	Ordering code
5.0 bar ±10%	DV Y 50 x P01
7.0 bar ±10%	DV Y 70 x P01
9.5 bar ±10%	DV Y 95 x P01

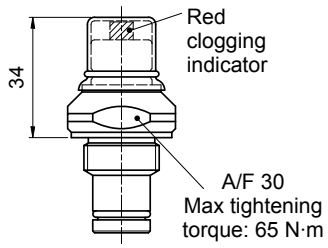

Hydraulic symbol

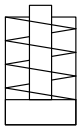

Materials
- Body: AISI 316L
- Internal parts: AISI 316L - Polyamide
- Contacts: Silver
- Seal: HNBR - MFQ

Technical data
- Reset: Manual reset
- Max working pressure: 420 bar
- Proof pressure: 630 bar
- Burst pressure: 1260 bar
- Working temperature: From -25 °C to +110 °C
- Compatibility with fluids: Mineral oils, Synthetic fluids HFA, HFB, HFC according to ISO 2943
- Degree protection: IP65 according to EN 60529

DVZ

Visual Differential Indicator

Settings	Ordering code
5.0 bar ±10%	DV Z 50 x P01
7.0 bar ±10%	DV Z 70 x P01
9.5 bar ±10%	DV Z 95 x P01

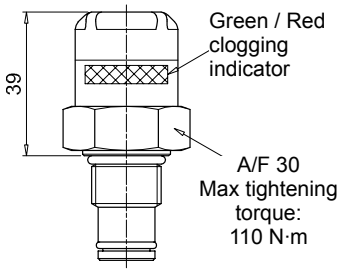

Hydraulic symbol

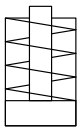

Materials
- Body: AISI 316L
- Internal parts: AISI 316L - Polyamide
- Contacts: Silver
- Seal: HNBR - MFQ

Technical data
- Reset: Automatic reset
- Max working pressure: 700 bar
- Proof pressure: 1050 bar
- Burst pressure: 2100 bar
- Working temperature: From -25 °C to +110 °C
- Compatibility with fluids: Mineral oils, Synthetic fluids HFA, HFB, HFC according to ISO 2943
- Degree protection: IP65 according to EN 60529

VE*50

Electrical Vacuum Indicator

R	Ordering code
EN 10226 - R1/8”	VE B 21 A A 50 P01

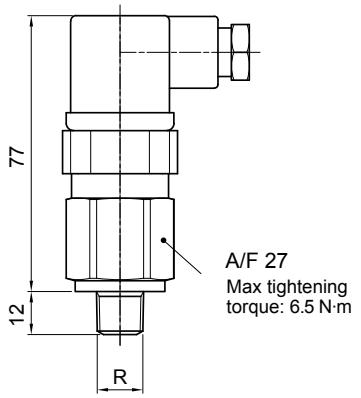

Hydraulic symbol

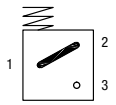

Electrical symbol

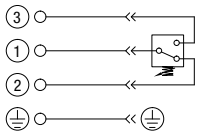

Materials
- Body: Brass
- Base: Black polyamide
- Contacts: Silver
- Seal: NBR

Technical data
- Vacuum setting: -0.21 bar ±10%
- Max working pressure: 10 bar
- Proof pressure: 15 bar
- Working temperature: From -25 °C to +80 °C
- Compatibility with fluids: Mineral oils, Synthetic fluids HFA, HFB, HFC according to ISO 2943
- Degree of protection: IP65 according to EN 60529

Electrical data
- Electrical connection: EN 175301-803
- Resistive load: 5 A / 14 Vdc
  4 A / 30 Vdc
  5 A / 125 Vac
  4 A / 250 Vac
- Available ATEX product: I M1 Ex ia I Ma
  II 1GD Ex ia IIC Tx Ex ia IIIC Tx°C X
- CE certification

X2

Indicator plug 420 bar

Seal	Ordering code
HNBR	X2 H
MFQ	X2 F

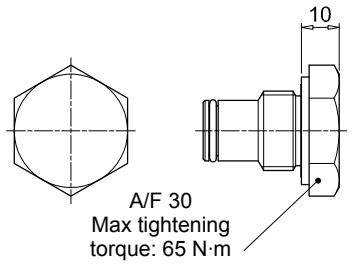

Materials
- Body: AISI 316L
- Seal: HNBR / MFQ

X3

Indicator plug 700 bar (only for FZH)

Seal	Ordering code
HNBR	X3 H
MFQ	X3 F

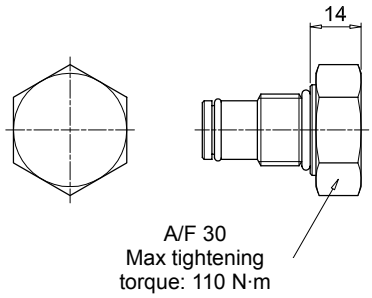

Materials
- Body: AISI 316L
- Seal: HNBR / MFQ

T2

Indicator plug

Seal	Ordering code
HNBR	T2 H
FPM	T2 V

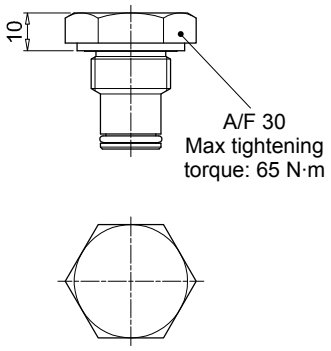

Materials

- Body: Phosphatized steel
- Seal: HNBR / FPM

DESIGNATION & ORDERING CODE - DIFFERENTIAL INDICATORS

Configuration example 1:	DE	H	50	F	A	48	P01
Configuration example 2:	DV	X	70	V	A	49	P01

Series	
DE	Electrical differential indicator
DV	Visual differential indicator

Type	DE	DV
H Hazardous area	•	-
X Standard type	•	•
Z 700 bar	•	•
Y Optional type	-	•

Pressure setting	DEH	DL	DV
50 5.0 bar	•	•	•
70 7.0 bar	•	•	•
95 9.5 bar	-	•	•

Seals	DEH	DL	DV
H HNBR	-	•	•
V FPM	•	•	•
F MFQ	•	-	-

Thermostat	DEH	DL	DV
A Without	•	•	-

Electrical connections	DEH	DV
48 Connection via three-core cable - fitting M20x1.5	•	-
49 Connection via four-core cable - fitting 1/2” NPT	•	-
51 Connection EN 175301-803, transparent base with lamps 24 Vdc	-	-
70 Connection IEC 61076-2-101 D (M12)	•	-

Option	
P01	MP Filtri standard
Pxx	Customized

DESIGNATION & ORDERING CODE - DIFFERENTIAL INDICATOR PLUG

Configuration example	X2	H

Series	
X2	Indicator plug 420 bar
X3	Indicator plug 700 bar (only for FZH)

Seals	
H	HNBR
V	FPM
F	MFQ