MFBX series
BOWL ASSEMBLY

Maximum working pressure up to 800 kPa (8 bar) - Flow rate up to 700 l/min

TYPICAL FILTER SIZING Selection Software

Step 1

Select “FILTER SIZING SOFTWARE” after login

OR

Select “FILTER SIZING” after login from a product page

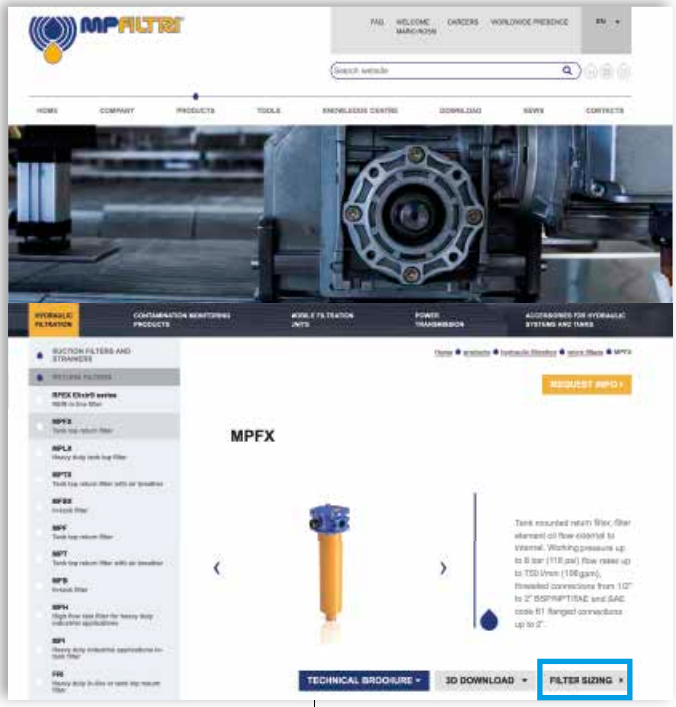

Step 2

Choose the type of filter family.
Enter the main data for sizing the filter then push CALCULATE.

Enter the main data for sizing the filter then push CALCULATE.

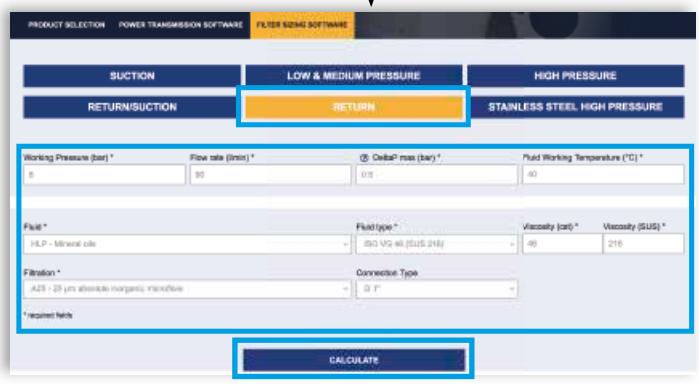

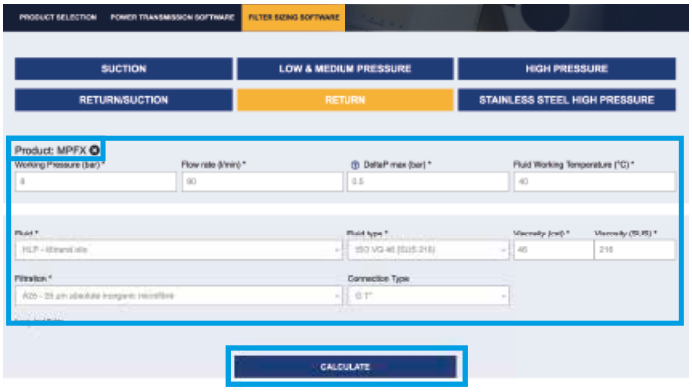

Step 3

Select the desidered options to choose the appropriate filter type for the application.

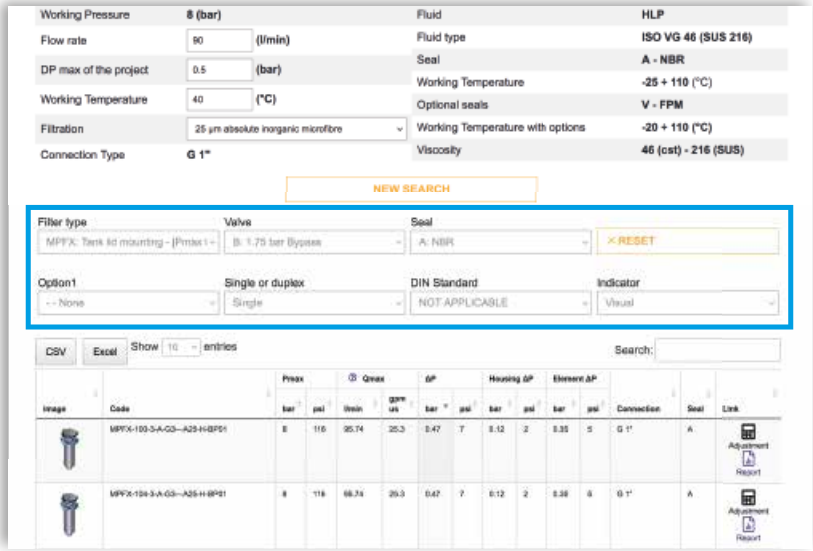

Step 4

Choose the most suitable filter from the proposed list.

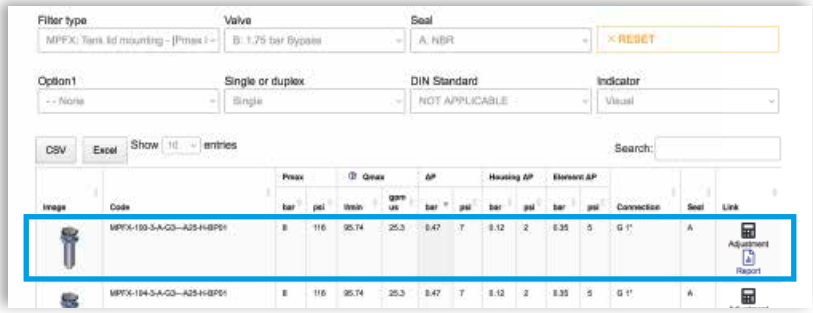

Step 5

A SAVE YOUR FILTER'S REPORT

B MANUAL EDIT

It is possible to change the filter modifying every parameter.

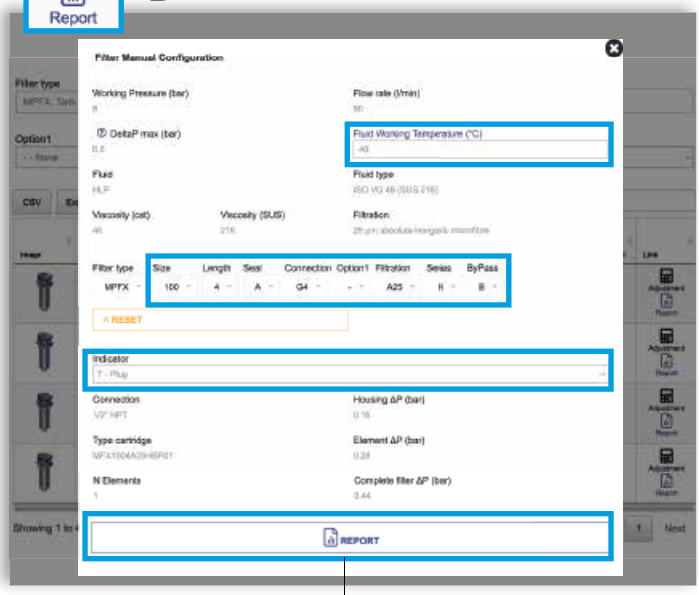

SAVE IN YOUR ARCHIVE
typing your reference data and then SAVE AS PDF

A new browser window displays the pdf

see **A**

Close the report window

By clicking your WELCOME button, the SHOW REPORTS is displayed: select it to see your filters list.

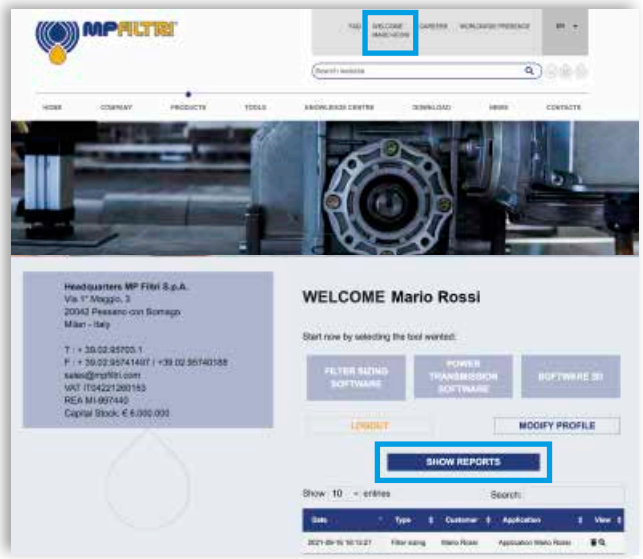

THE X CONCEPT FOR OUR FILTERS

Protect the performance of your system with MYclean.
Quality and efficiency are fundamental for MP Filtri:
this exclusive new filter element possesses polygon shape geometry and specific seal that ensures only original spare parts can be used - ensuring correct operation and higher system reliability.

MFBX series

with MYCLEAN MFX Filter Element

- **Protects the machine from improper use of non-original products.**
- **Safety of constant quality protection & reliability**

With exclusive filter element you are sure that only MP Filtri filter elements can be used, ensuring the best cleaning level of the oil due to the use of originals filter elements.

The products identified as MFBX are protected by:

- Italian Patent n° 102014902261205
- Canadian Patent n° 2,937,258
- European Patent n° 16181725.9
- US Patent n° 15/224,337

TOGETHER WITH MYCLEAN, AS OPTION, MFBX SERIES CAN BE PROVIDED WITH

zerospark®

THE ANTI-STATIC FILTERS

THE Z CONCEPT FOR OUR FILTERS

Zerospark® is a specialist solution designed to solve the problem of electrostatic discharge inside hydraulic filters. Caused by the electrical charge build-up due to the passage of oil through the filters, this can result in damage to filter elements, oils and circuit components. It can even cause fire hazards in environments where flammable materials are present.

MFBX GENERAL INFORMATION

Description

Return filter | Bowl assembly

Maximum working pressure up to 800 kPa (8 bar)
Flow rate up to 700 l/min

MFBX is a range of return filter kits for protection of the reservoir against the system contamination.
They are directly integrated in the moulded reservoir in immersed or semi-immersed position to save space into the tank.
Treaded or flanged covers can be provided.
The filter output must be always immersed into the fluid to avoid aeration or foam generation into the reservoir.

Available features:
- Fine filtration rating, to get a good cleanliness level into the reservoir
- Bypass valve integrated into the filter element, to relieve excessive pressure drop across the filter media
- Extension tube, to be used in deep reservoirs (sold as separate item)
- Diffuser, to reduce the risk of aeration, foaming and noise (sold as separate item)
- MyClean interface connection, to protect the product against non-original spare parts
- External protective wrap, to optimize the flow through the element and to save the element efficiency against non-proper handling

Common applications:
Mobile machines

Technical data

Bowl assembly materials
- Cover
  Polyamide: MFBX 020-030-100
  Aluminium: MFBX 180-190

- Bowl: Polyamide

Filter element materials
- Caps: Polyamide
- Spring: Spring steel

Bypass valve
- Opening pressure 175 kPa (1.75 bar) ±10%
- Opening pressure 300 kPa (3 bar) ±10%

Δp element type
- Microfibre filter elements - series H: 10 bar
- Fluid flow through the filter element from OUT to IN

Seals
- Standard NBR series A
- Optional FPM series V

Temperature
From -25 °C to +110 °C

Note
MFBX filters are provided for vertical mounting

Weights [kg] and volumes [dm³]

Filter series	Weights [kg]					Volumes [dm³]				
	Length	1	2	3	4	Length	1	2	3	4
MFBX 020		0.25	0.35	0.40	-		0.10	0.15	0.20	-
MFBX 030		0.25	-	-	-		0.15	-	-	-
MFBX 100		0.50	0.60	0.75	0.95		0.35	0.50	0.80	1.10
MFBX 180		1.60	2.40	-	-		1.50	2.90	-	-
MFBX 190		-	2.40	-	-		-	3.00	-	-

FILTER ASSEMBLY SIZING
Flow rates [l/min]

		Filter element design - H series					Filter element design - N series		
Filter series	Length	A03	A06	A10	A16	A25	M25 M60 M90	P10	P25
MFBX 020	**1**	7	10	23	28	42	59	51	54
	2	17	20	45	48	56	72	64	67
	3	21	24	50	55	59	76	74	75
MFBX 030	**1**	7	10	24	29	47	84	60	66
MFBX 100	**1**	18	20	53	56	65	153	87	96
	2	28	38	65	75	95	158	111	123
	3	48	55	125	135	169	289	224	251
	4	79	89	180	185	198	306	264	289
MFBX 180	**1**	127	148	235	243	278	441	285	299
	2	231	262	358	382	388	472	404	412
MFBX 190	**2**	261	305	489	528	546	696	583	598

Maximum flow rate for a complete return filter with a pressure drop Δp = 0.5 bar.
The reference fluid has a kinematic viscosity of 30 mm^2/s (cSt) and a density of 0.86 kg/dm^3.
For different pressure drop or fluid viscosity we recommend to use our selection software available on www.mpfiltri.com.
You can also calculate the right size using the formulas present on the FILTER SIZING paragraph at the beginning of the full catalogue or at the beginning of the filter family brochure.
Please, contact our Sales Department for further additional information.

Hydraulic symbols

Filter series	Style 1 connection
MFBX 020	•
MFBX 030	•
MFBX 100	•
MFBX 180	•
MFBX 190	•

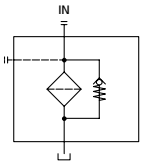

Designation & Ordering code

COMPLETE FILTER

Configuration example 1:	MFBX100	1	A	2	A10	H	E	P01
Configuration example 2:	MFBX180	2	V	1	M25	N	B	P01

Series and size

MFBX020 | **MFBX100** | **MFBX190** Filter featuring
MFBX030 | **MFBX180** MY CLEAN Filter Element

Length	MFBX020	MFBX030	MFBX100	MFBX180	MFBX190
1	•	•	•	•	-
2	•	-	•	•	•
3	•	-	•	-	-
4	-	-	•	-	-

Seals

A NBR
V FPM

Version	MFBX020	MFBX030	MFBX100	MFBX180	MFBX190
1 Without cover	•	•	•	•	•
2 With flanged cover type MPF	-	•	•	•	•
3 With threaded cover type MPT	•	-	•	-	-

Filtration rating (filter media)

A03	Inorganic microfiber 3 µm	**M25**	Wire mesh 25 µm
A06	Inorganic microfiber 6 µm	**M60**	Wire mesh 60 µm
A10	Inorganic microfiber 10 µm	**M90**	Wire mesh 90 µm
A16	Inorganic microfiber 16 µm	**P10**	Resin impregnated paper 10 µm
A25	Inorganic microfiber 25 µm	**P25**	Resin impregnated paper 25 µm

Element Δp	Filter media Axx	Mxx	Pxx
N 10 bar	-	•	•
H 10 bar	•	-	-

Bypass valve
E 3 bar
B 1.75 bar

Executions: Base	zerospark	
P01	**Z01**	MP Filtri standard
Pxx	**Zxx**	Customized

FILTER ELEMENT

Configuration example 1:	MFX180	2	M25	H	V		P01
Configuration example 2:	MFX100	1	A10	N	B	E	P01

Element series and size

MFX020 | **MFX100**
MFX030 | **MFX180** Filter Element with MY CLEAN feature

Element length	MFX020	MFX030	MFX100	MFX180	MFX190
1	•	•	•	•	-
2	•	-	•	•	•
3	•	-	•	-	-
4	-	-	•	-	-

Filtration rating (filter media)

A03	Inorganic microfiber 3 µm	**M25**	Wire mesh 25 µm
A06	Inorganic microfiber 6 µm	**M60**	Wire mesh 60 µm
A10	Inorganic microfiber 10 µm	**M90**	Wire mesh 90 µm
A16	Inorganic microfiber 16 µm	**P10**	Resin impregnated paper 10 µm
A25	Inorganic microfiber 25 µm	**P25**	Resin impregnated paper 25 µm

Element Δp	Filter media Axx	Mxx	Pxx
N 10 bar	-	•	•
H 10 bar	•	-	-

Seals
B NBR
V FPM

Bypass valve
E 3 bar
- 1.75 bar

Executions: Base	zerospark	
P01	**Z01**	MP Filtri standard
Pxx	**Zxx**	Customized

ACCESSORIES

See page 278

	MFBX020	MFBX030	MFBX100	MFBX180	MFBX190
TE Extension tube	•	•	•	•	•
DFS Diffuser with fast lock connection	-	-	•	-	-

Dimensions

MFBX

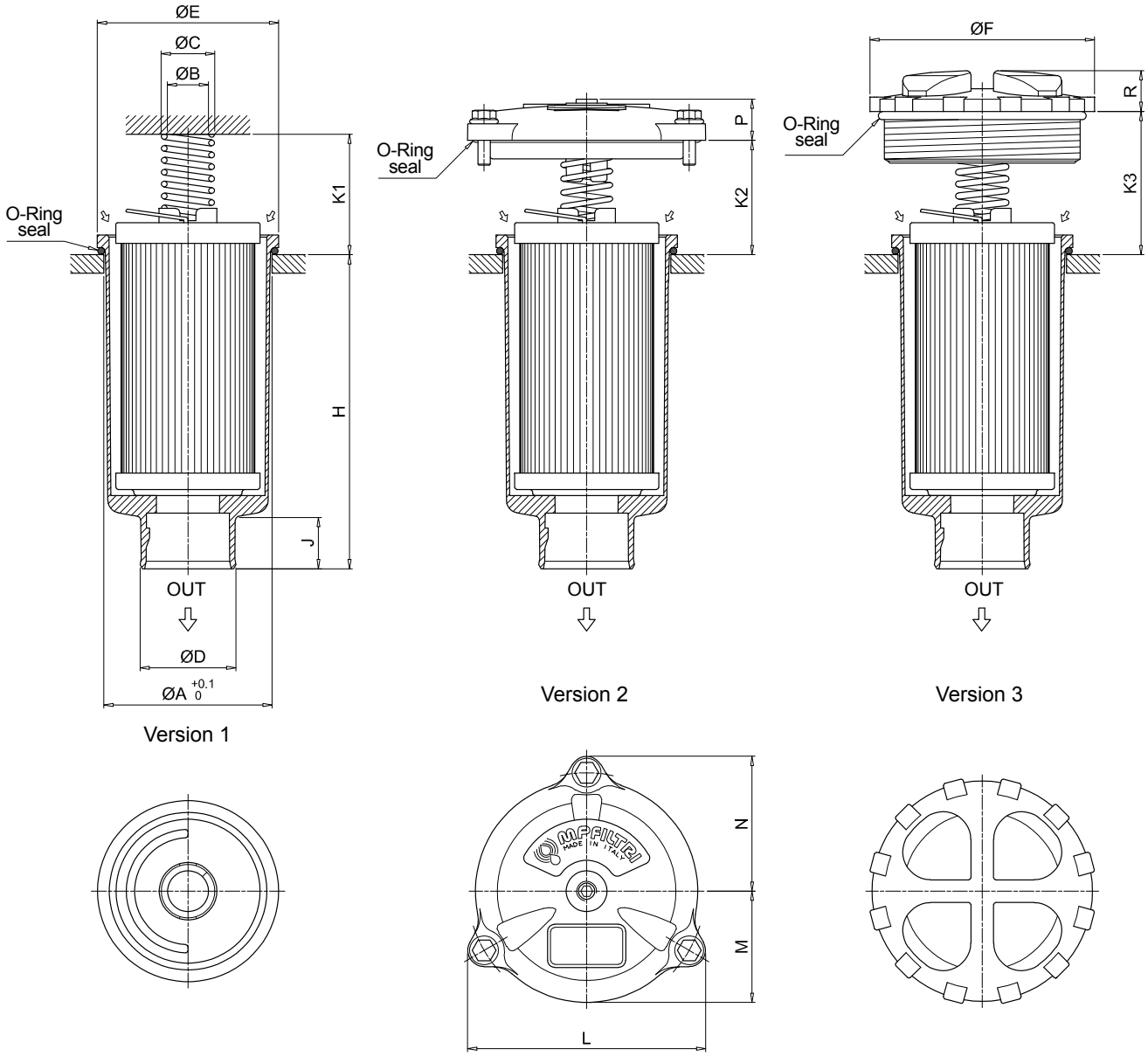

Filter size	Filter Length	ø A [mm]	ø B [mm]	ø C [mm]	ø D [mm]	ø E [mm]	ø F [mm]	H [mm]	J [mm]	K1 [mm]	K2 [mm]	K3 [mm]	L [mm]	M [mm]	N [mm]	P [mm]	R [mm]
020	1	52	20.5	26	32	56	75	111	24	42	-	36	-	-	-	-	18
	2	52	20.5	26	32	56	75	175	24	42	-	36	-	-	-	-	18
	3	52	20.5	26	32	56	75	214	24	42	-	36	-	-	-	-	18
030	1	60.5	20	25.5	32	68	-	93	21	33	35	-	92	42	52	18	-
100	1	80.5	20	26	47	88	111	109	24	58	55	69	116	54	66	20	20
	2	80.5	20	26	47	88	111	154	24	58	55	69	116	54	66	20	20
	3	80.5	20	26	47	88	111	232	24	58	55	69	116	54	66	20	20
	4	80.5	20	26	47	88	111	334	24	58	55	69	116	54	66	20	20
180	1	112.5	26	33.5	47	121	-	234	31	58	69	-	159	76	95	21	-
	2	112.5	26	33.5	47	121	-	447	31	58	69	-	159	76	95	21	-
190	2	112.5	26	33.5	50	121	-	454	38	58	69	-	159	76	95	21	-

Order number for spare parts

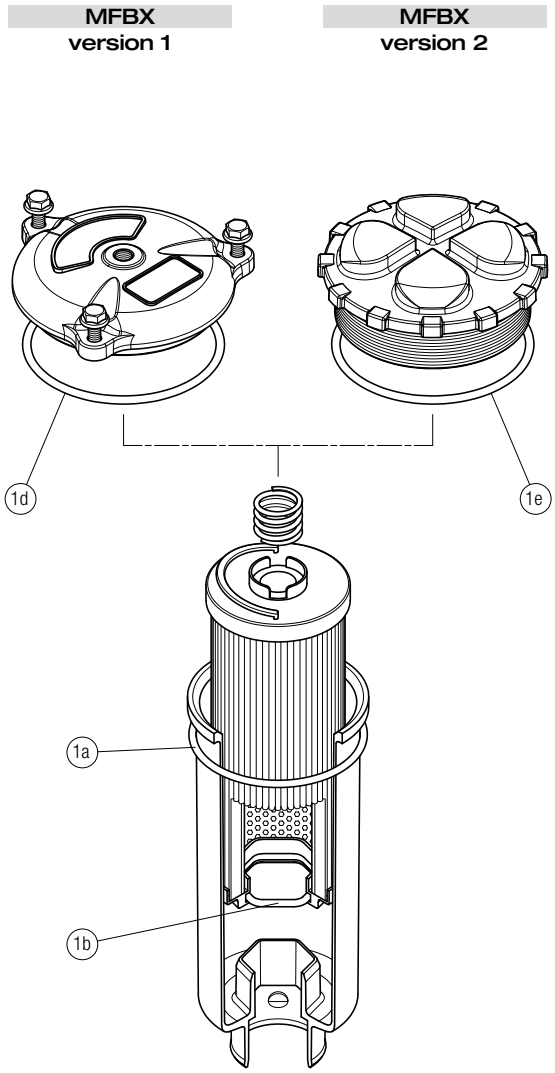

Item:	Q.ty: 1 pc. 1 (1a ÷ 1d)	
Filter series	Seal Kit code number NBR	FPM
MFBX 020	02050713	02050714
MFBX 030	02050715	02050716
MFBX 100	02050717	02050718
MFBX 180-190	02050719	02050720

Clogging indicators

Introduction

Filter elements are efficient only if their Dirt Holding Capacity is fully exploited. This is achieved by using filter housings equipped with clogging indicators.

These devices trip when the clogging of the filter element causes an increase in pressure drop across the filter element.

The indicator is set to alarm before the element becomes fully clogged.

MP Filtri can supply indicators of the following designs:

- **Vacuum switches and gauges**
- **Pressure switches and gauges**
- **Differential pressure indicators**

These type of devices can be provided with a visual, electrical or both signals.

Suitable indicator types

BAROMETRIC INDICATORS
Pressure indicators are used on the Return line to check the efficiency of the filter element.
They measure the pressure upstream of the filter element.
Standard items are produced with R 1/8” EN 10226 connection.

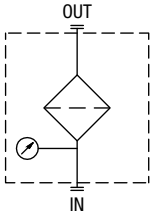

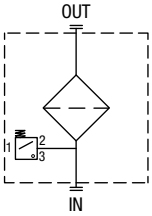

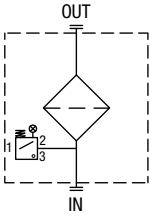

DIFFERENTIAL INDICATORS
Differential indicators are used on the Pressure line to check the efficiency of the filter element.
They measure the pressure upstream and downstream of the filter element (differential pressure).
Standard items are produced with special connection G 1/2” size.
Also available in Stainless Steel models.

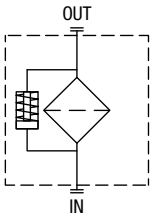

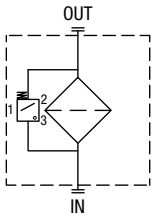

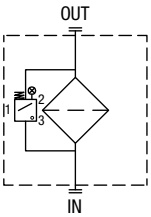

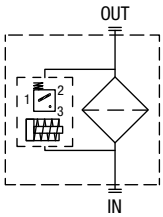

Quick reference guide

Filter family	Filter series		Visual indicators	Electrical indicators	Electrical / Visual indicators
RETURN FILTERS	With bypass 1.75 bar	ELIXIR® RFEX060-080-110-160	BVA14P01 BVR14P01 BVP15HP01 BVQ15HP01	BEA15HA50P01 BEM15HA41P01	BLA15HA51P01 BLA15HA52P01 BLA15HA53P01 BLA15HA71P01
	Without bypass	ELIXIR® RFEX060-080-110-160	BVA25P01 BVR25P01 BVP20HP01 BVQ20HP01	BEA20HA50P01 BEM20HA41P01	BLA20HA51P01 BLA20HA52P01 BLA20HA53P01 BLA20HA71P01
	With bypass 1.75 bar	MDH 250	BVA14P01 BVR14P01 BVP15HP01 BVQ15HP01 DVS12HP01	BEA15HA50P01 BEM15HA41P01 DES12HA10P01 DES12HA30P01 DES12HA80P01	BLA15HA51P01 BLA15HA52P01 BLA15HA53P01 BLA15HA71P01
	With bypass 3 bar	MDH 250	BVA25P01 BVR25P01 BVP20HP01 BVQ20HP01 DVS25HP01	BEA20HA50P01 BEM20HA41P01 DES25HA10P01 DES25HA30P01 DES25HA80P01	BLA20HA51P01 BLA20HA52P01 BLA20HA53P01 BLA20HA71P01
	With bypass 1.75 bar	MPFX MPTX MPF MPT MPH	BVA14P01 BVR14P01 BVP15HP01 BVQ15HP01	BEA15HA50P01 BEM15HA41P01	BLA15HA51P01 BLA15HA52P01 BLA15HA53P01 BLA15HA71P01
	With bypass 3 bar	MPFX MPTX MPF MPT	BVA25P01 BVR25P01 BVP20HP01 BVQ20HP01	BEA20HA50P01 BEM20HA41P01	BLA20HA51P01 BLA20HA52P01 BLA20HA53P01 BLA20HA71P01
	With bypass 2.5 bar	MPH			
	With bypass 4.5 bar	MPLX	DVA20xP01 DVM20xP01	DEA20xA50P01 DEM20XX10P01 DEM20XX20P01 DEM20XX30P01 DEM20XX35P01 DTA20xF70P01	DLA20xA51P01 DLA20xA52P01 DLA20xA71P01 DLE20xA50P01 DLE20xF50P01
	With bypass 2.4 bar	FRI			

BAROMETRIC INDICATORS

Dimensions

BEA*50

Electrical Pressure Indicator

Settings	Ordering code
1.5 bar ±10%	BE A 15 H A 50 P01
2.0 bar ±10%	BE A 20 H A 50 P01

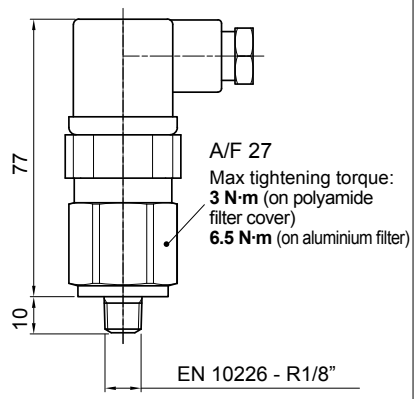

Hydraulic symbol

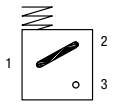

Electrical symbol

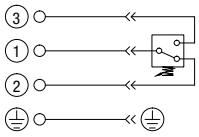

Materials
- Body: Brass
- Base: Black polyamide
- Contacts: Silver
- Seal: HNBR

Technical data
- Max working pressure: 40 bar
- Proof pressure: 60 bar
- Working temperature: From -25 °C to +80 °C
- Compatibility with fluids: Mineral oils, Synthetic fluids HFA, HFB, HFC according to ISO 2943
- Degree of protection: IP65 according to EN 60529

Electrical data
- Electrical connection: EN 175301-803
- Resistive load: 5 A / 14 Vdc; 4 A / 30 Vdc; 5 A / 125 Vac; 4 A / 250 Vac
- Available ATEX product: I M1 Ex ia I Ma; II 1GD Ex ia IIC TX Ga Ex ia IIIC TX °C Da
- CE certification

BEM*41

Electrical Pressure Indicator

Settings	Ordering code
1.5 bar ±10%	BE M 15 H A 41 P01
2.0 bar ±10%	BE M 20 H A 41 P01

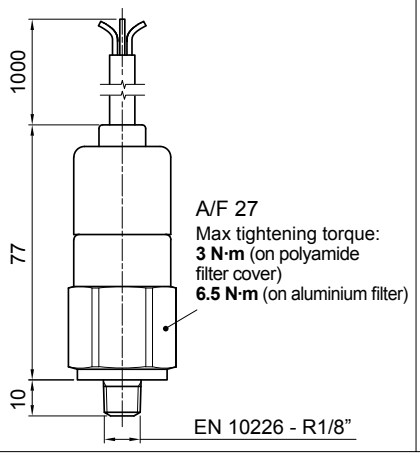

Hydraulic symbol

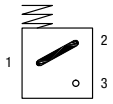

Electrical symbol

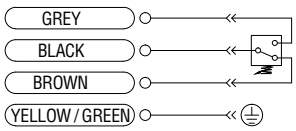

Materials
- Body: Brass
- Base: Black polyamide
- Contacts: Silver
- Seal: HNBR

Technical data
- Max working pressure: 40 bar
- Proof pressure: 60 bar
- Working temperature: From -25 °C to +80 °C
- Compatibility with fluids: Mineral oils, Synthetic fluids HFA, HFB, HFC according to ISO 2943
- Degree of protection: IP67 according to EN 60529

Electrical data
- Electrical connection: Four-core cable
- Resistive load: 5 A / 14 Vdc; 4 A / 30 Vdc; 5 A / 125 Vac; 4 A / 250 Vac
- CE certification

On request this indicator can be provided with main connectors in use for wirings.

BL*51 - BL*52 - BL*53

Electrical/Visual Pressure Indicator

Settings	Ordering code
1.5 bar ±10%	BL A 15 H A xx P01
2.0 bar ±10%	BL A 20 H A xx P01

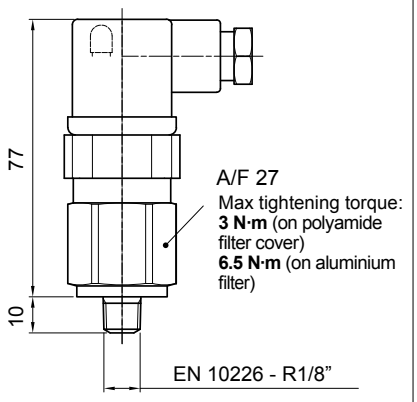

Hydraulic symbol

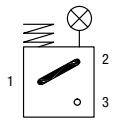

Electrical symbol

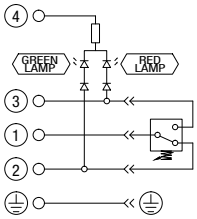

Materials
- Body: Brass
- Base: Transparent polyamide
- Contacts: Silver
- Seal: HNBR

Technical data
- Max working pressure: 40 bar
- Proof pressure: 60 bar
- Working temperature: From -25 °C to +80 °C
- Compatibility with fluids: Mineral oils, Synthetic fluids HFA, HFB, HFC according to ISO 2943
- Degree of protection: IP65 according to EN 60529

Electrical data
- Electrical connection: EN 175301-803

- Type	51	52	53
- Lamps	24 Vdc	110 Vdc	230 Vac
- Resistive load:	1 A / 24 Vdc	1 A / 110 Vdc	1 A / 230 Vac

BL*71

Electrical/Visual Pressure Indicator

Settings	Ordering code
1.5 bar ±10%	BL A 15 H A 71 P01
2.0 bar ±10%	BL A 20 H A 71 P01

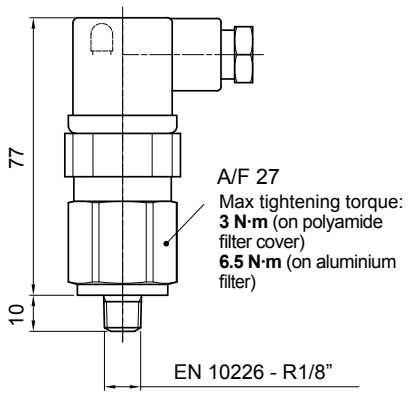

Hydraulic symbol

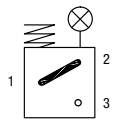

Electrical symbol

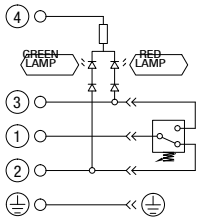

Materials
- Body: Brass
- Base: Black polyamide
- Contacts: Silver
- Seal: HNBR

Technical data
- Max working pressure: 40 bar
- Proof pressure: 60 bar
- Working temperature: From -25 °C to +80 °C
- Compatibility with fluids: Mineral oils, Synthetic fluids HFA, HFB, HFC according to ISO 2943
- Degree of protection: IP65 according to EN 60529

Electrical data
- Electrical connection: IEC 61076-2-101 D (M12)
- Lamps: 24 Vdc
- Resistive load: 0.4 A / 24 Vdc

BVA

Axial Pressure Gauge

Settings	Ordering code
1.4 bar ±10%	BV A 14 P01
2.5 bar ±10%	BV A 25 P01

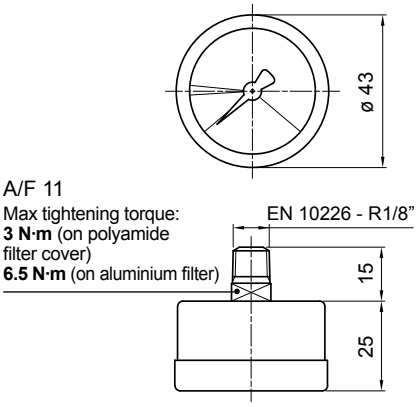

Hydraulic symbol

Dial scale

BV A 14 P01

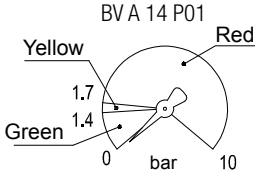

BV A 25 P01

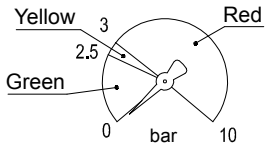

Materials
- Case: Painted Steel
- Window: Transparent plastic
- Dial: Painted Steel
- Pointer: Painted Aluminium
- Pressure connection: Brass
- Pressure element: Bourdon tube Cu-alloy soft soldered

Technical data
- Max working pressure: Static: 7 bar Fluctuating: 6 bar Short time: 10 bar
- Working temperature: From -40 °C to +60 °C
- Compatibility with fluids: Mineral oils, Synthetic fluids HFA, HFB, HFC according to ISO 2943
- Accuracy: Class 2.5 according to EN 13190
- Degree of protection: IP31 according to EN 60529

BVR

Radial Pressure Gauge

Settings	Ordering code
1.4 bar ±10%	BV R 14 P01
2.5 bar ±10%	BV R 25 P01

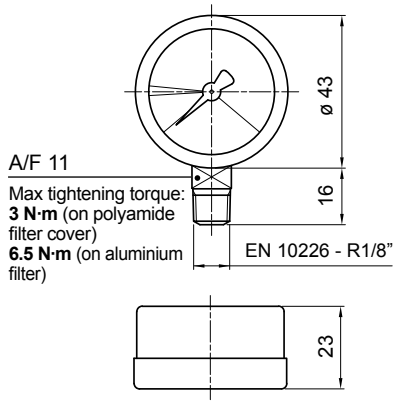

Hydraulic symbol

Dial scale

BV R 14 P01

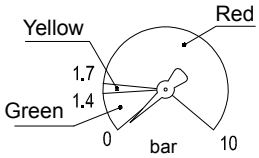

BV R 25 P01

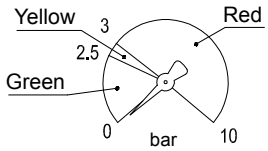

Materials
- Case: Painted Steel
- Window: Transparent plastic
- Dial: Painted Steel
- Pointer: Painted Aluminium
- Pressure connection: Brass
- Pressure element: Bourdon tube Cu-alloy soft soldered

Technical data
- Max working pressure: Static: 7 bar Fluctuating: 6 bar Short time: 10 bar
- Working temperature: From -40 °C to +60 °C
- Compatibility with fluids: Mineral oils, Synthetic fluids HFA, HFB, HFC according to ISO 2943
- Accuracy: Class 2.5 according to EN 13190
- Degree of protection: IP31 according to EN 60529

Dimensions

BVP - BVQ

Visual Pressure Indicator

Setting	Ordering code
1.5 bar ±10%	BV P 15 H P01
	BV Q 15 H P01
2.0 bar ±10%	BV P 20 H P01
	BV Q 20 H P01

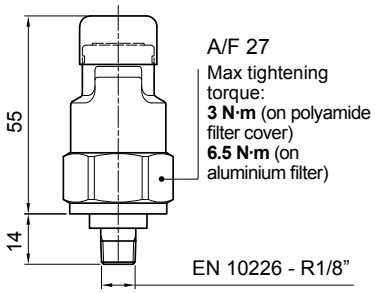

Hydraulic symbol

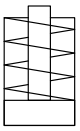

Materials

- Body: Brass
- Cover / internal parts: Polyamide
- Caps: VMQ
- Seal: HNBR

Technical data

- Reset: BVP - Automatic reset
  BVQ - Manual reset
- Max working pressure: 10 bar
- Proof pressure: 15 bar
- Working temperature: From -25 °C to +80 °C
- Compatibility with fluids: Mineral oils, Synthetic fluids
  HFA, HFB, HFC according to ISO 2943
- Degree of protection: IP45 according to EN 60529

Signals

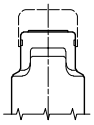

Absence of pressure
(no indicator)

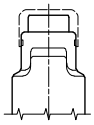

Presence of pressure
(green button rises gradually)

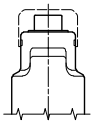

Clogged filter element
(red button risen)

DESIGNATION & ORDERING CODE

Configuration example 1:	BE	M	15	H	A	41	P01
Configuration example 2:	BL	A	20	H	A	71	P01
Configuration example 3:	BV	R	14				P01
Configuration example 4:	BV	P	20	H			P01

Series

- **BE** Electrical pressure indicator
- **BL** Electrical/Visual pressure indicator
- **BV** Visual pressure indicator

Type	BE	BL
A Standard type	•	•
M With wired electrical connection	•	-

BV	
A	Axial connection pressure gauge
R	Radial connection pressure gauge
P	Visual indicator with automatic reset
Q	Visual indicator with manual reset

Pressure setting	BEA-BEM	BLA	BVA-BVR	BVP-BVQ
14 1.4 bar	-	-	•	-
15 1.5 bar	•	•	-	-
20 2.0 bar	•	•	-	•
25 2.5 bar	-	-	•	-

Seals	BE	BLA	BVA-BVR	BVP-BVQ
H HNBR	•	•	-	•

Thermostat	BEA-BEM	BLA	BV
A Without	•	•	-

Electrical connections	BEA	BEM	BL	BV
41 Connection via four-core cable	-	•	-	-
50 Connection EN 175301-803	•	-	-	-
51 Connection EN 175301-803, transparent base with lamps 24 Vdc	-	-	•	-
52 Connection EN 175301-803, transparent base with lamps 110 Vdc	-	-	•	-
53 Connection EN 175301-803, transparent base with lamps 230 Vdc	-	-	•	-
71 Connection IEC 61076-2-101 D (M12), black base with lamps 24 Vdc	-	-	•	-

Option	
P01	MP Filtri standard
Pxx	Customized

DEA*50

Electrical Differential Indicator

Settings	Ordering code
2.0 bar ±10%	DE A 20 x A 50 P01

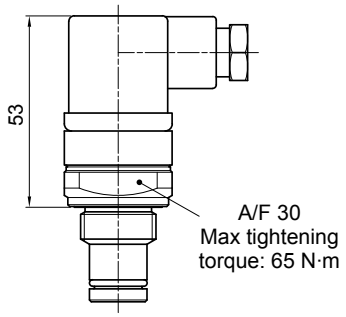

Hydraulic symbol

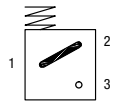

Electrical symbol

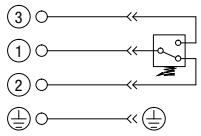

Materials
- Body: Brass
- Base: Black polyamide
- Contacts: Silver
- Seal: HNBR - FPM

Technical data
- Max working pressure: 420 bar
- Proof pressure: 630 bar
- Burst pressure: 1260 bar
- Working temperature: From -25 °C to +110 °C
- Compatibility with fluids: Mineral oils, Synthetic fluids HFA, HFB, HFC according to ISO 2943
- Degree protection: IP66 according to EN 60529 IP69K according to ISO 20653

Electrical data
- Electrical connection: EN 175301-803
- Resistive load: 0.2 A / 115 Vdc

DEM*10

Electrical Differential Indicator

Settings	Ordering code
2.0 bar ±10%	DE M 20 xx 10 P01

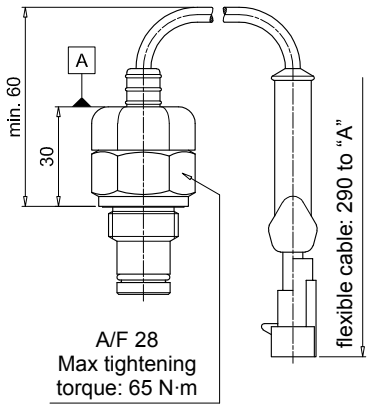

Hydraulic symbol

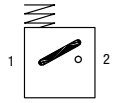

Electrical symbol

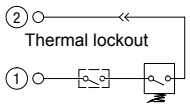

Materials
- Body: Brass
- Base: Black polyamide
- Contacts: Silver
- Seal: HNBR - FPM

Technical data
- Max working pressure: 420 bar
- Proof pressure: 630 bar
- Burst pressure: 1260 bar
- Working temperature: From -25 °C to +110 °C
- Compatibility with fluids: Mineral oils, Synthetic fluids HFA, HFB, HFC according to ISO 2943
- Degree protection: IP66 according to EN 60529

Electrical data
- Electrical connection: AMP Superseal series 1.5
- Resistive load: 0.2 A / 115 Vdc
- Switching type: Normally open contacts (NC on request)
- Thermal lockout: Normally open up to 30 °C (option "F")

DEM*20

Electrical Differential Indicator

Settings	Ordering code
2.0 bar ±10%	DE M 20 xx 20 P01

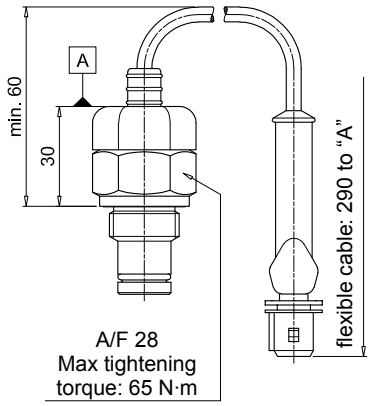

Hydraulic symbol

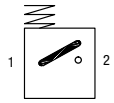

Electrical symbol

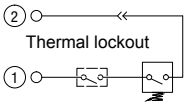

Materials
- Body: Brass
- Base: Black polyamide
- Contacts: Silver
- Seal: HNBR - FPM

Technical data
- Max working pressure: 420 bar
- Proof pressure: 630 bar
- Burst pressure: 1260 bar
- Working temperature: From -25 °C to +110 °C
- Compatibility with fluids: Mineral oils, Synthetic fluids HFA, HFB, HFC according to ISO 2943
- Degree protection: IP66 according to EN 60529

Electrical data
- Electrical connection: AMP Time junior
- Resistive load: 0.2 A / 115 Vdc
- Switching type: Normally open contacts (NC on request)
- Thermal lockout: Normally open up to 30 °C (option "F")

Dimensions

DEM*30

Electrical Differential Indicator

Settings	Ordering code
2.0 bar ±10%	DE M 20 xx 30 P01

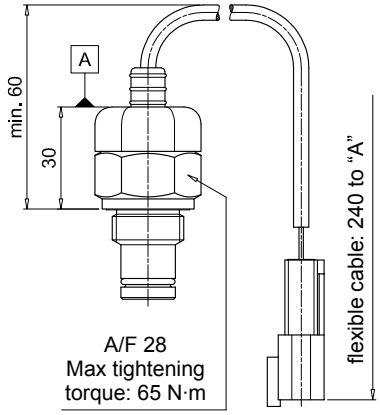

Hydraulic symbol

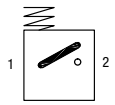

Electrical symbol

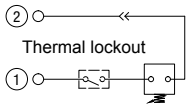

Materials
- Body: Brass
- Base: Black polyamide
- Contacts: Silver
- Seal: HNBR - FPM

Technical data
- Max working pressure: 420 bar
- Proof pressure: 630 bar
- Burst pressure: 1260 bar
- Working temperature: From -25 °C to +110 °C
- Compatibility with fluids: Mineral oils, Synthetic fluids HFA, HFB, HFC according to ISO 2943
- Degree protection: IP66 according to EN 60529

Electrical data
- Electrical connection: Deutsch DT-04-2-P
- Resistive load: 0.2 A / 115 Vdc
- Switching type: Normally open contacts (NC on request)
- Thermal lockout: Normally open up to 30 °C (option "F")

DEM*35

Electrical Differential Indicator

Settings	Ordering code
2.0 bar ±10%	DE M 20 xx 35 P01

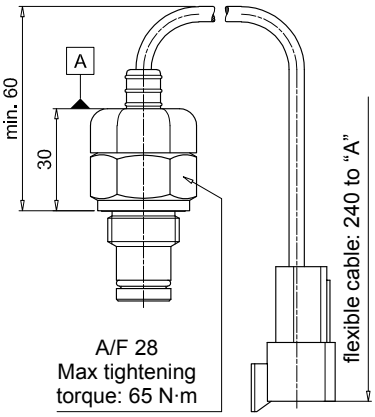

Hydraulic symbol

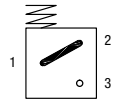

Electrical symbol

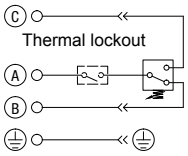

Materials
- Body: Brass
- Base: Black polyamide
- Contacts: Silver
- Seal: HNBR - FPM

Technical data
- Max working pressure: 420 bar
- Proof pressure: 630 bar
- Burst pressure: 1260 bar
- Working temperature: From -25 °C to +110 °C
- Compatibility with fluids: Mineral oils, Synthetic fluids HFA, HFB, HFC according to ISO 2943
- Degree protection: IP66 according to EN 60529

Electrical data
- Electrical connection: Deutsch DT-04-3-P
- Resistive load: 0.2 A / 115 Vdc
- Switching type: SPDT contact
- Thermal lockout: Normally open up to 30 °C (option "F")

DES*10

Electrical Differential Indicator

Settings	Ordering code
1.2 bar ±10%	DE S 12 H A 10 P01
2.5 bar ±10%	DE S 25 H A 10 P01

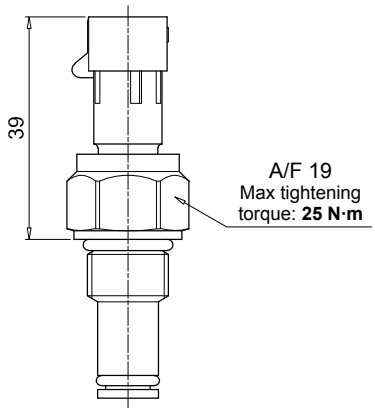

Hydraulic symbol

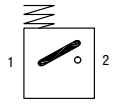

Electrical symbol

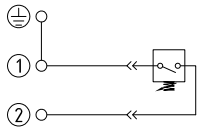

Materials
- Body: Brass
- Internal parts: Brass - Polyamide
- Contacts: Silver
- Seal: HNBR

Technical data
- Max working pressure: 16 bar
- Proof pressure: 24 bar
- Burst pressure: 48 bar
- Working temperature: From -25 °C to +110 °C
- Compatibility with fluids: Mineral oils, Synthetic fluids HFA, HFB, HFC according to ISO 2943
- Degree protection: IP67 according to EN 60529

Electrical data
- Electrical connection: AMP Superseal series 1.5
- Resistive load: 0.2 A / 24 Vdc
- Switching type: Normally open contacts (NC on request)

DES*30

Electrical Differential Indicator

Settings	Ordering code
1.2 bar ±10%	DE S 12 H A 30 P01
2.5 bar ±10%	DE S 25 H A 30 P01

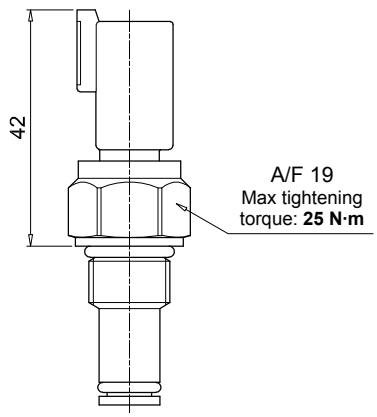

Hydraulic symbol

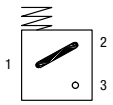

Electrical symbol

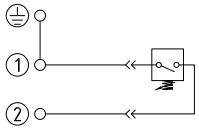

Materials
- Body: Brass
- Internal parts: Brass - Polyamide
- Contacts: Silver
- Seal: HNBR

Technical data
- Max working pressure: 16 bar
- Proof pressure: 24 bar
- Burst pressure: 48 bar
- Working temperature: From -25 °C to +110 °C
- Compatibility with fluids: Mineral oils, Synthetic fluids HFA, HFB, HFC according to ISO 2943
- Degree protection: IP67 according to EN 60529

Electrical data
- Electrical connection: Deutsch DT-04-2-P
- Resistive load: 0.2 A / 24 Vdc
- Switching type: Normally open contacts (NC on request)

DES*80

Electrical Differential Indicator

Settings	Ordering code
1.2 bar ±10%	DE S 12 H A 80 P01
2.5 bar ±10%	DE S 25 H A 80 P01

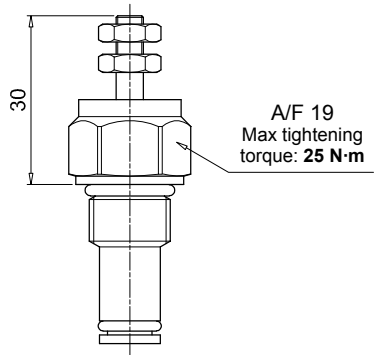

Hydraulic symbol

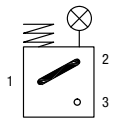

Electrical symbol

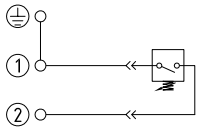

Materials
- Body: Brass
- Internal parts: Brass - Polyamide
- Contacts: Silver
- Seal: HNBR

Technical data
- Max working pressure: 16 bar
- Proof pressure: 24 bar
- Burst pressure: 48 bar
- Working temperature: From -25 °C to +110 °C
- Compatibility with fluids: Mineral oils, Synthetic fluids HFA, HFB, HFC according to ISO 2943
- Degree protection: IP67 according to EN 60529

Electrical data
- Electrical connection: Stud #10-32 UNF
- Resistive load: 0.2 A / 24 Vdc
- Switching type: Normally open contacts (NC on request)

DLA*51 - DLA*52

Electrical/Visual Differential Indicator

Settings	Ordering code
2.0 bar ±10%	DL A 20 x A xx P01

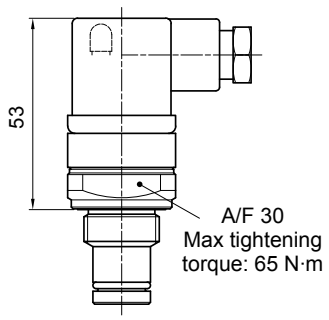

Hydraulic symbol

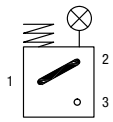

Electrical symbol

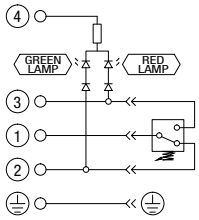

Materials
- Body: Brass
- Base: Transparent polyamide
- Contacts: Silver
- Seal: HNBR - FPM

Technical data
- Max working pressure: 420 bar
- Proof pressure: 630 bar
- Burst pressure: 1260 bar
- Working temperature: From -25 °C to +110 °C
- Compatibility with fluids: Mineral oils, Synthetic fluids HFA, HFB, HFC according to ISO 2943
- Degree protection: IP66 according to EN 60529 IP69K according to ISO 20653

Electrical data
- Electrical connection: EN 175301-803
- Type: 51 / 52
- Lamps: 24 Vdc / 110 Vdc
- Resistive load: 1 A / 24 Vdc / 1 A / 110 Vdc

Dimensions

DLA*71

Electrical/Visual Differential Indicator

Settings	Ordering code
2.0 bar ±10%	DL A 20 x A 71 P01

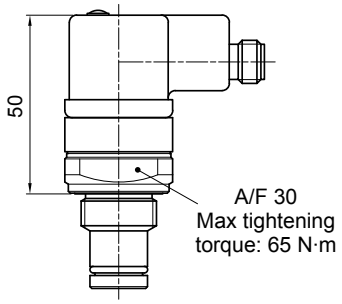

Hydraulic symbol

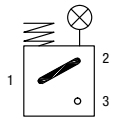

Electrical symbol

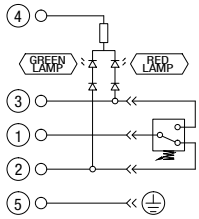

Materials
- Body: Brass
- Base: Black polyamide
- Contacts: Silver
- Seal: HNBR - FPM

Technical data
- Max working pressure: 420 bar
- Proof pressure: 630 bar
- Burst pressure: 1260 bar
- Working temperature: From -25 °C to +110 °C
- Compatibility with fluids: Mineral oils, Synthetic fluids HFA, HFB, HFC according to ISO 2943
- Degree protection: IP65 according to EN 60529 IP69K according to ISO 20653

Electrical data
- Electrical connection: IEC 61076-2-101 D (M12)
- Lamps 24 Vdc
- Resistive load: 0.4 A / 24 Vdc

DLE*A50

Electrical/Visual Differential Indicator

Settings	Ordering code
2.0 bar ±10%	DL E 20 x A 50 P01

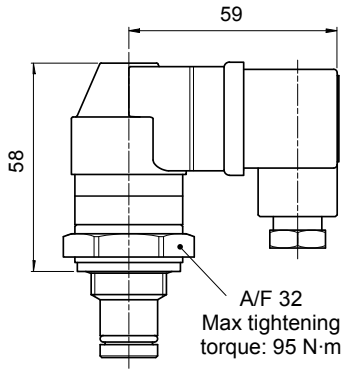

Hydraulic symbol

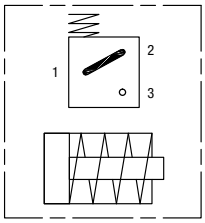

Electrical symbol

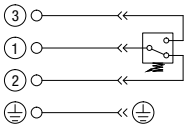

Materials
- Body: Brass
- Base: Black polyamide
- Contacts: Silver
- Seal: HNBR - FPM

Technical data
- Max working pressure: 420 bar
- Proof pressure: 630 bar
- Burst pressure: 1260 bar
- Working temperature: From -25 °C to +110 °C
- Compatibility with fluids: Mineral oils, Synthetic fluids HFA, HFB, HFC according to ISO 2943
- Degree protection: IP65 according to EN 60529

Electrical data
- Electrical connections: EN 175301-803
- Resistive load: 5 A / 250 Vac
- Available the connector with lamps

DLE*F50

Electrical/Visual Differential Indicator

Settings	Ordering code
2.0 bar ±10%	DL E 20 x F 50 P01

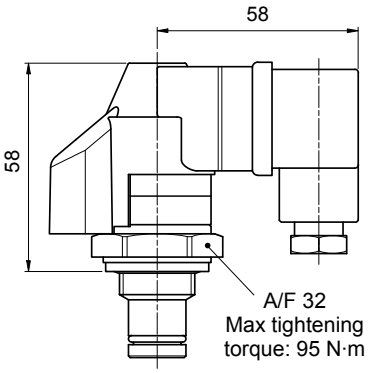

Hydraulic symbol

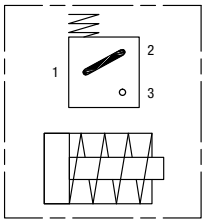

Electrical symbol

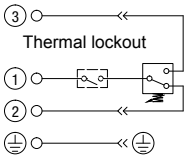

Materials
- Body: Brass
- Base: Black polyamide
- Contacts: Silver
- Seal: HNBR - FPM

Technical data
- Max working pressure: 420 bar
- Proof pressure: 630 bar
- Burst pressure: 1260 bar
- Working temperature: From -25 °C to +110 °C
- Compatibility with fluids: Mineral oils, Synthetic fluids HFA, HFB, HFC according to ISO 2943
- Degree protection: IP65 according to EN 60529

Electrical data
- Electrical connections: EN 175301-803
- Resistive load: 5 A / 250 Vac
- Thermal lockout setting: +30 °C

DTA*70

Electrical Differential Indicator

Settings	Ordering code
2.0 bar ±10%	DT A 20 x x 70 P01

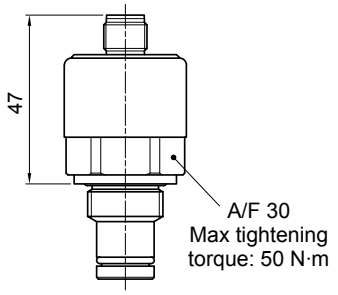

Hydraulic symbol

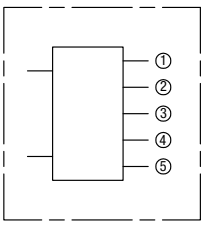

Electrical symbol

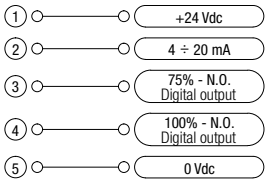

Materials
- Body: Brass
- Internal parts: Brass - Nylon
- Contacts: Silver
- Seal: HNBR - FPM

Industry 4.0 READY

Technical data
- Max working pressure: 420 bar
- Proof pressure: 630 bar
- Burst pressure: 1260 bar
- Compatibility with fluids: Mineral oils, Synthetic fluids HFA, HFB, HFC according to ISO 2943
- Degree protection: IP67 according to EN 60529

Electrical data
- Electrical connection: IEC 61076-2-101 D (M12)
- Power supply: 24 Vdc
- Analogue output: From 4 to 20 mA
- Thermal lockout: 30 °C (all output signals stalled up to 30 °C)

DVA

Visual Differential Indicator

Settings	Ordering code
2.0 bar ±10%	DV A 20 x P01

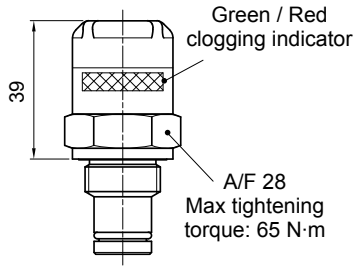

Hydraulic symbol

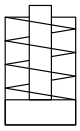

Materials
- Body: Brass
- Internal parts: Brass - Nylon
- Contacts: Silver
- Seal: HNBR - FPM

Technical data
- Reset: Automatic reset
- Max working pressure: 420 bar
- Proof pressure: 630 bar
- Burst pressure: 1260 bar
- Working temperature: From -25 °C to +110 °C
- Compatibility with fluids: Mineral oils, Synthetic fluids HFA, HFB, HFC according to ISO 2943
- Degree protection: IP65 according to EN 60529

DVM

Visual Differential Indicator

Settings	Ordering code
2.0 bar ±10%	DV M 20 x P01

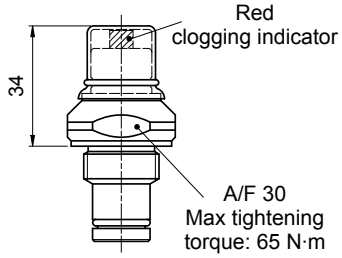

Hydraulic symbol

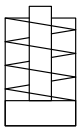

Materials
- Body: Brass
- Internal parts: Brass - Nylon
- Contacts: Silver
- Seal: HNBR - FPM

Technical data
- Reset: Manual reset
- Max working pressure: 420 bar
- Proof pressure: 630 bar
- Burst pressure: 1260 bar
- Working temperature: From -25 °C to +110 °C
- Compatibility with fluids: Mineral oils, Synthetic fluids HFA, HFB, HFC according to ISO 2943
- Degree protection: IP65 according to EN 60529

Dimensions

DVS

Visual Differential Indicator

Settings	Ordering code
1.2 bar ±10%	DV S 12 H P01
2.5 bar ±10%	DV S 25 H P01

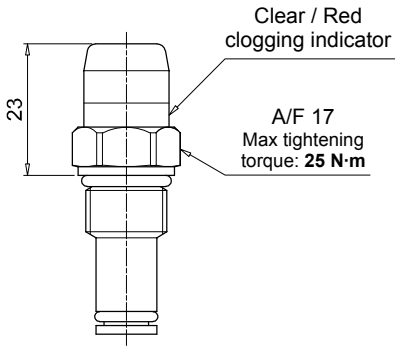

Hydraulic symbol

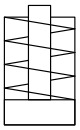

Materials

- Body: Brass
- Internal parts: Brass - Polyamide
- Contacts: Silver
- Seal: HNBR

Technical data

- Reset: Automatic reset
- Max working pressure: 16 bar
- Proof pressure: 24 bar
- Burst pressure: 48 bar
- Working temperature: From -25 °C to +110 °C
- Compatibility with fluids: Mineral oils, Synthetic fluids HFA, HFB, HFC according to ISO 2943
- Degree protection: IP67 according to EN 60529

T2

Indicator plug

Seal	Ordering code
HNBR	T2 H
FPM	T2 V

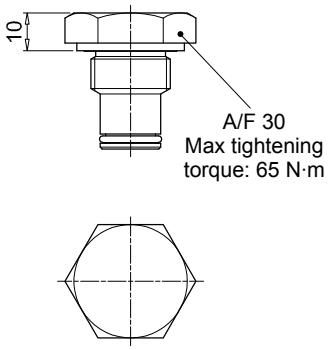

Materials

- Body: Phosphatized steel
- Seal: HNBR / FPM

DESIGNATION & ORDERING CODE - DIFFERENTIAL INDICATORS

Configuration example 1:	DE	M	20	H	F	50	P01
Configuration example 2:	DL	E	20	V	A	71	P01
Configuration example 3:	DT	A	20	H	F	70	P01
Configuration example 4:	DV	M	20	V			P01

Series

DE	Electrical differential indicator
DL	Electrical/Visual differential indicator
DT	Electrical differential indicator
DV	Visual differential indicator

Type	DE	DL	DT
A Standard type	•	•	•
M With wired electrical connection	•	-	-
E For high power supply	-	•	-
S Compact version	•	-	-

DV	
A	With automatic reset
M	With manual reset
S	With automatic reset

Pressure setting	DE	DL	DT	DV
12 1.2 bar	•	-	-	•
20 2.0 bar	•	•	•	•
25 2.5 bar	•	-	-	-

Seals

H	HNBR
V	FPM

Thermostat	DEA	DEM	DLA	DLE	DT	DV
A Without thermostat	•	•	•	•	-	-
F With thermostat	-	•	-	•	•	-

Electrical connections	DEA	DEM	DLA	DLE	DT	DV
10 Connection AMP Superseal series 1.5	-	•	-	-	-	-
20 Connection AMP Timer Junior	-	•	-	-	-	-
30 Connection Deutsch DT-04-2-P	-	•	-	-	-	-
35 Connection Deutsch DT-04-3-P	-	•	-	-	-	-
50 Connection EN 175301-803	•	-	-	•	-	-
51 Connection EN 175301-803, transparent base with lamps 24 Vdc	-	-	•	-	-	-
52 Connection EN 175301-803, transparent base with lamps 110 Vdc	-	-	•	-	-	-
70 Connection IEC 61076-2-101 D (M12)	-	-	-	-	•	-
71 Connection IEC 61076-2-101 D (M12), black base with lamps 24 Vdc	-	-	•	-	-	-

Option

P01	MP Filtri standard
Pxx	Customized

DESIGNATION & ORDERING CODE - DIFFERENTIAL INDICATOR PLUG

Configuration example	T2	H

Series

T2	Indicator plug

Seals

H	HNBR
V	FPM

Accessories

POLYAMIDE EXTENSION TUBE

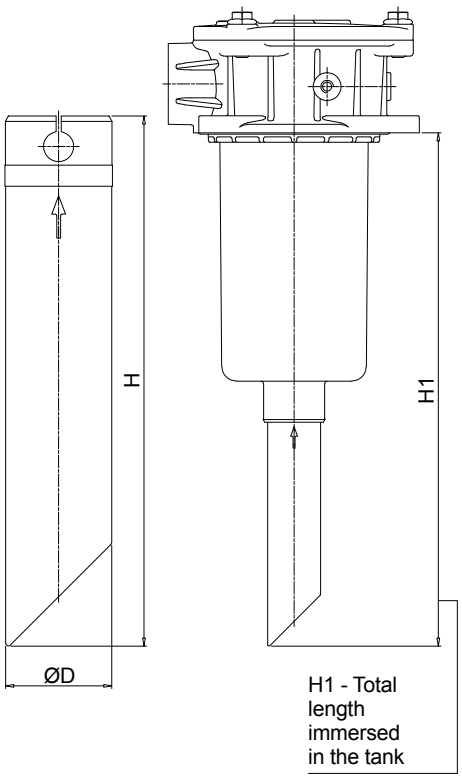

Configuration example: TE | 40 | A | 250

Series
TE

Size	ø D [mm]
25	25
32	32
40	40

Material	
A	Polyamide

Length	H [mm]
200	200
250	250
300	300
350	350
400	400
450	450
500	500

COMPATIBILITY TABLE

Filter series	Filter size					Filter length	TE25	TE32	TE40	Tube length H1 [mm] 200	250	300	350	400	450	500
MPF - MPFX	30					1	•	-	-	266	316	366	416	466	516	566
MPF	100	104	110			1	-	•	-	275	325	375	425	475	525	575
						2				322	372	422	472	522	572	622
						3	-	-	•	400	450	500	550	600	650	700
						4				502	552	602	652	702	752	802
MPFX	100	104	110			1	-	-	•	277	327	377	427	477	527	577
						2				322	372	422	472	522	572	622
						3				400	450	500	550	600	650	700
						4				502	552	602	652	702	752	802
MPF MPFX	181	182	184			1	-	-	•	410	460	510	560	610	660	710
						2				623	673	723	773	823	873	923
MPT MPTX	025	027				1	•	-	-	278	328	378	428	478	528	578
						2				342	392	442	492	542	592	642
						3				380	430	480	530	580	630	680
MPT	101	104	110	114	120	1	-	•	-	273	323	373	423	473	523	573
						2				320	370	420	470	520	570	620
						3	-	-	•	396	446	496	546	596	646	696
						4				498	548	598	648	698	748	798
MPTX	101	104	110	114	120	1	-	-	•	273	323	373	423	473	523	573
						2				318	368	418	468	518	568	618
						3				396	446	496	546	596	656	696
						4				498	548	598	648	698	748	798

STEEL EXTENSION TUBE

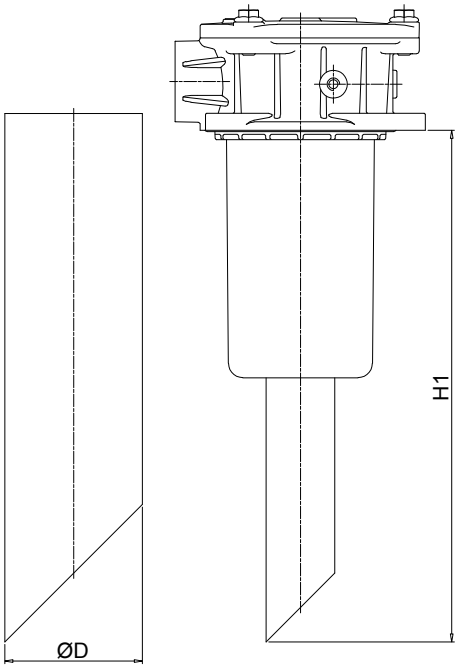

Configuration example:

MPF191 | 2 | A | F1 | A10 | H | B | S60

Length	H1 [mm]
S30	300
S35	350
S40	400
S45	450
S50	500
S60	600
S70	700
S80	800
S90	900

COMPATIBILITY TABLE

Filter series	Filter size				Filter length	ø D [mm] 52	65
MPF	191	192	194		2	•	-
	400	410	450	451	1	•	-
					2	-	•
					3		
	750				1	-	•

DIFFUSER WITH FAST LOCK CONNECTION

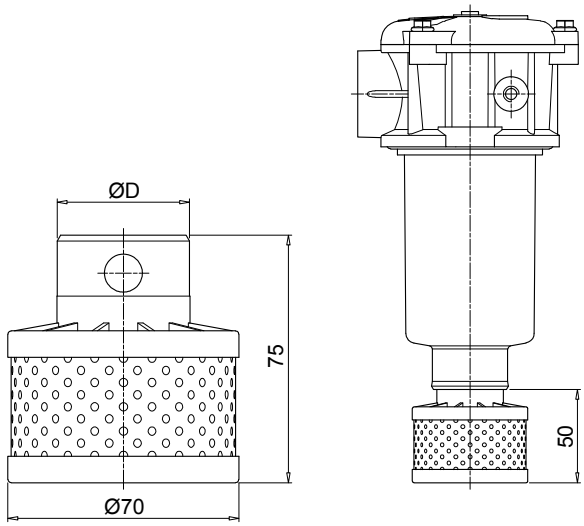

Configuration example: DFS | 32 | A | 075

Series
DFS

Size	ø D [mm]
32	32
40	40

Version	
A	Standard

Length	
075	Standard

COMPATIBILITY TABLE

Filter series	Filter size					Filter Length	DFS32	DFS40
MPF	100		104		110	1	•	-
						2		
						3	-	•
						4		
MPFX	100		104		110	1	-	•
						2		
						3		
						4		
MPT	101	104	110	114	120	1	•	-
						2		
						3	-	•
						4		
MPTX	101	104	110	114	120	1	-	•
						2		
						3		
						4		

DIPSTICK

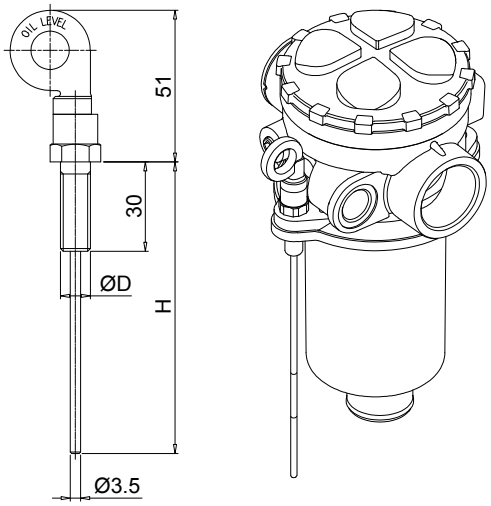

Materials
- Screw: phosphatized steel
- Stick: phosphatized steel
- Handle: Polyamide

Technical data
Working temperature: from -25 °C to +110 °C

Configuration example: DPT | 20 | M10 | A | P01

Series
DPT

Length	H [mm]
15	134
20	184
25	234
30	284
35	334

Fastening	
M8	Fastening with screws ø D = M8
M10	Fastening with screws ø D = M10

Seals	
A	NBR
V	FPM

Execution	
P01	MP Filtri standard
Pxx	Customized

FILLER PLUG

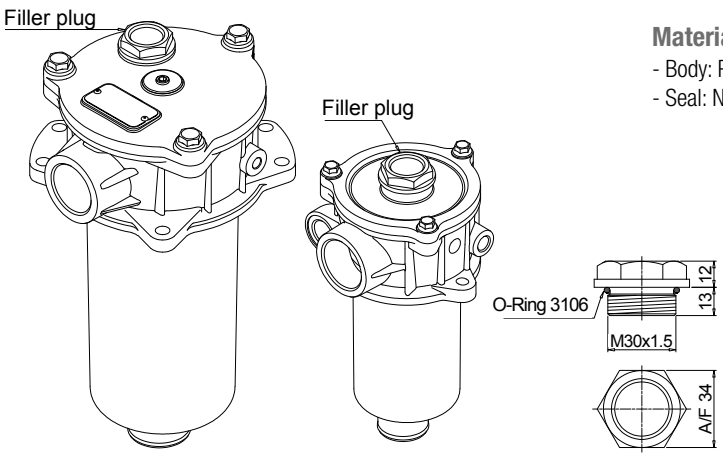

Materials
- Body: Polyamide
- Seal: NBR

Technical data
Tightening torque:
15 N·m

For any further information, please, contact our commercial dept.