FMP 039 series

Maximum working pressure up to 11 MPa (110 bar) - Flow rate up to 80 l/min

TYPICAL FILTER SIZING Selection Software

Step 1

Select “FILTER SIZING SOFTWARE” after login

OR

Select “FILTER SIZING” after login from a product page

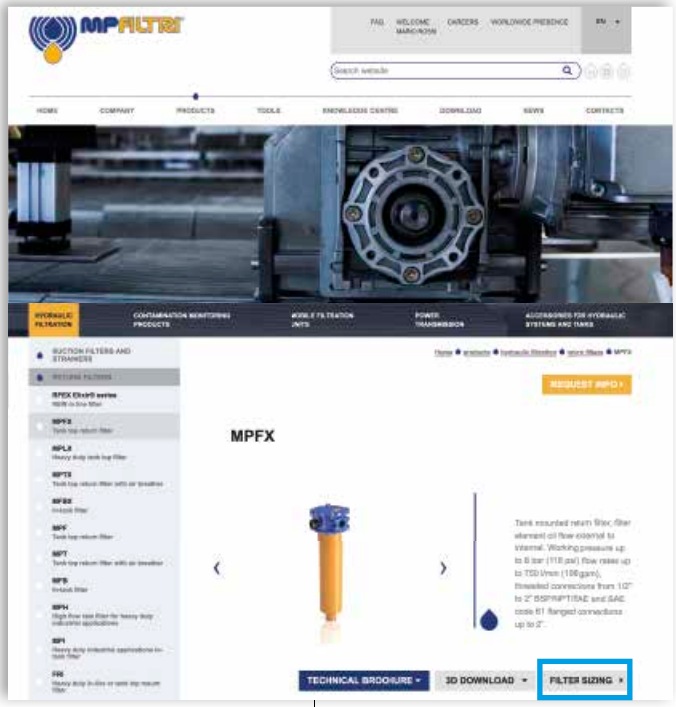

Step 2

Choose the type of filter family.
Enter the main data for sizing the filter then push CALCULATE.

Enter the main data for sizing the filter then push CALCULATE.

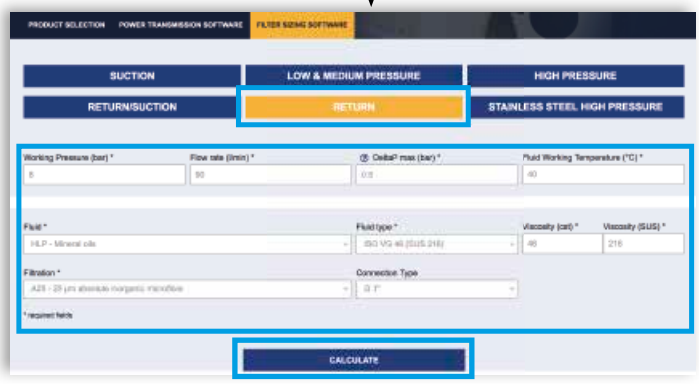

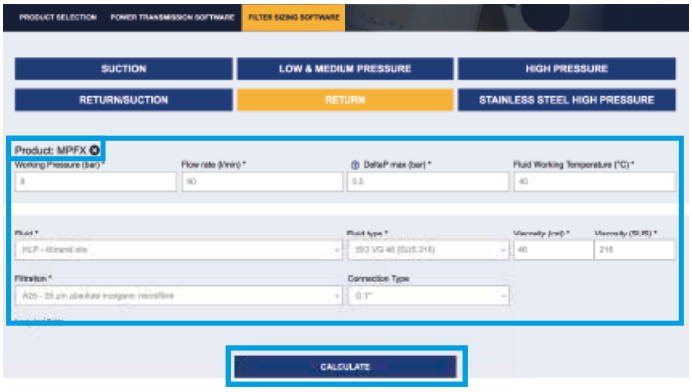

Step 3

Select the desidered options to choose the appropriate filter type for the application.

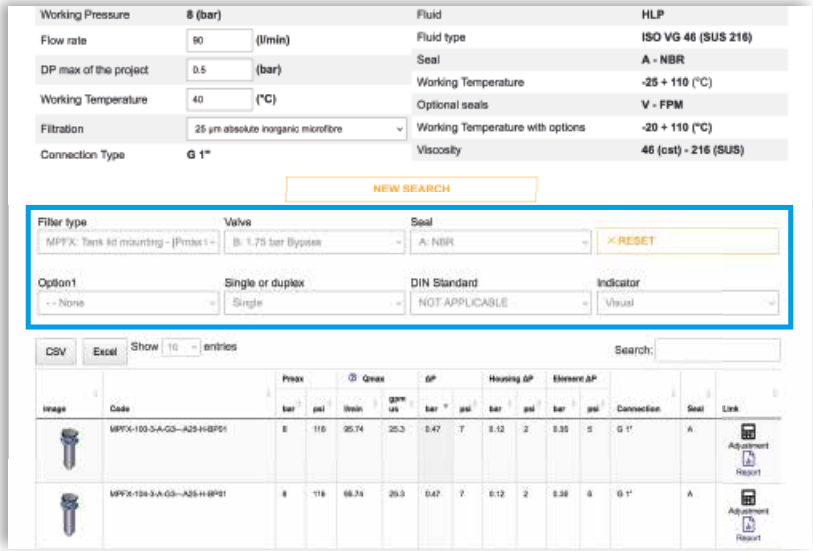

Step 4

Choose the most suitable filter from the proposed list.

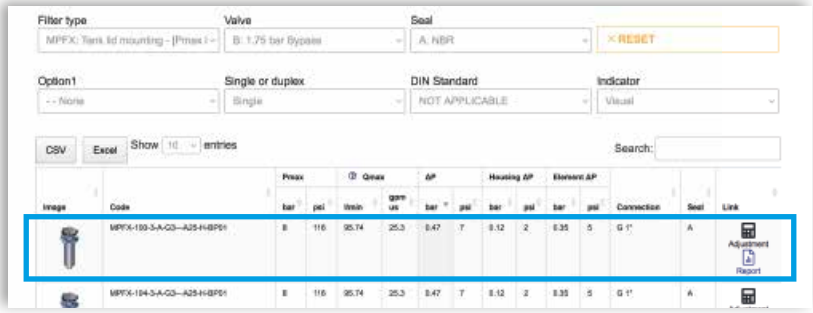

Step 5

A SAVE YOUR FILTER'S REPORT

B MANUAL EDIT

It is possible to change the filter modifying every parameter.

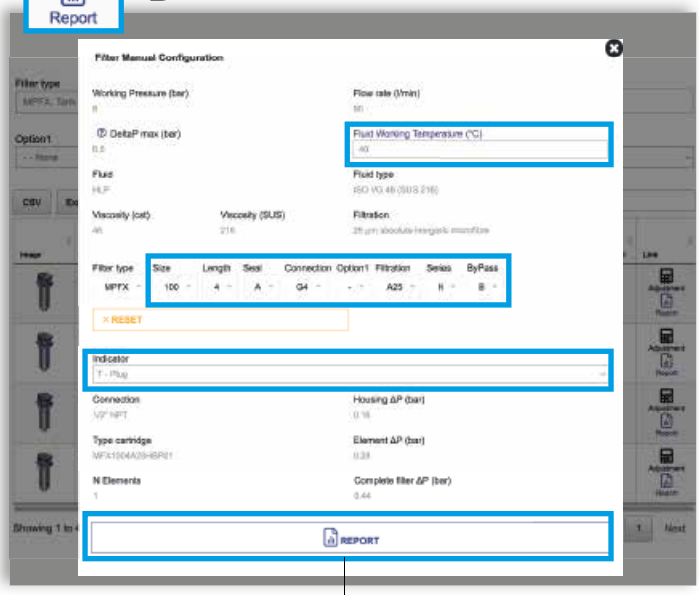

SAVE IN YOUR ARCHIVE
typing your reference data and then SAVE AS PDF

A new browser window displays the pdf

see **A**

Close the report window

By clicking your WELCOME button, the SHOW REPORTS is displayed: select it to see your filters list.

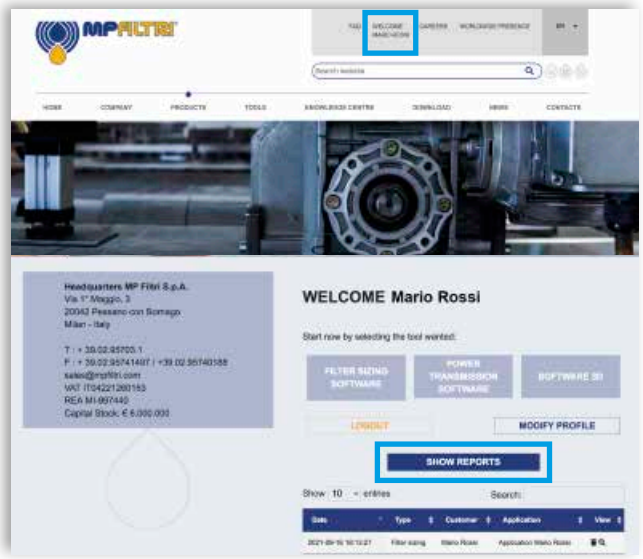

FMP 039 GENERAL INFORMATION

Description

High Pressure filters

In-line
Maximum working pressure up to 11 MPa (110 bar)
Flow rate up to 80 l/min

FMP039 is a range of versatile medium pressure filter for transmission, protection of sensitive components in medium pressure hydraulic systems and filtration of the coolant into the machine tools.
They are directly connected to the lines of the system through the hydraulic fittings.

Available features:
- 1/2" female threaded connections, for a maximum flow rate of 80 l/min
- Fine filtration rating, to get a good cleanliness level into the system
- Bypass valve, to relieve excessive pressure drop across the filter media
- Low collapse filter element "N", for use with filters provided with bypass valve
- Visual, electrical and electronic differential clogging indicators

Common applications:
Delivery lines, in any medium pressure industrial equipment or mobile machines

Technical data

Filter housing materials
- Head: Anodized aluminium
- Housing: Anodized aluminium
- Bypass valve: Steel

Pressure
- Test pressure: 17 MPa (170 bar)
- Burst pressure: 33 MPa (330 bar)
- Pulse pressure fatigue test: 1 000 000 cycles with pressure from 0 to 11 MPa (110 bar)

Bypass valve
- Opening pressure 600 kPa (6 bar) ±10%
- Other opening pressures on request.

Δp element type
- Microfibre filter elements - series N: 20 bar
- Wire mesh filter elements - series N: 20 bar
- Fluid flow through the filter element from OUT to IN.

Seals
- Standard NBR series A
- Optional FPM series V

Temperature
From -25 °C to +110 °C

Connections
In-line Inlet/Outlet

Note
FMP 039 filters are provided for vertical mounting

Weights [kg] and volumes [dm³]

Filter series	Weights [kg]				Volumes [dm³]			
	Length	2	3	4	Length	2	3	4
FMP 039		0.60	0.70	0.80		0.19	0.26	0.34

Executions

Execution 1:
without indicator connection

Execution 6
double indicator connection (A - B)

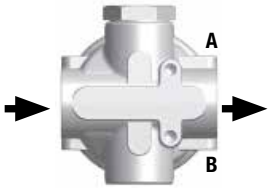

A:
Closure cap with standard T2 steel. The position of the cap is reversible.

B:
Standard closure cap with plastic thread protection.

If necessary, a second T2 plug is available, see ordering information.

Special connections on request

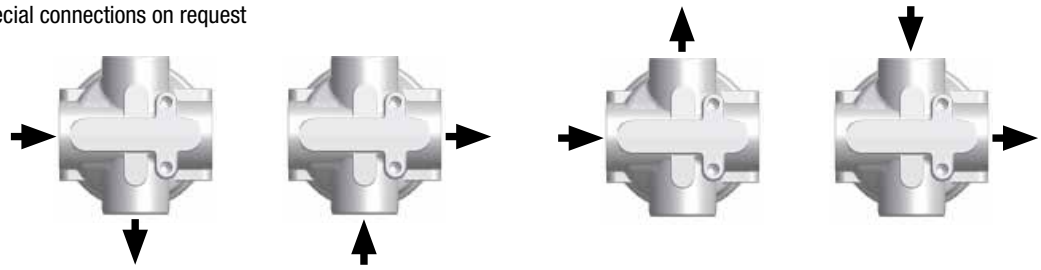

FILTER ASSEMBLY SIZING
Flow rates [l/min]

		Filter element design - N Series					
Filter series	Length	A03	A06	A10	A16	A25	M25
	2	20	26	45	52	61	97
FMP 039	3	35	39	56	64	76	98
	4	44	48	66	71	82	92

Maximum flow rate for a complete pressure filter with a pressure drop Δp = 1.5 bar.
The reference fluid has a kinematic viscosity of 30 mm^2/s (cSt) and a density of 0.86 kg/dm^3.
For different pressure drop or fluid viscosity we recommend to use our selection software available on www.mpfiltri.com.
You can also calculate the right size using the formulas present on the FILTER SIZING paragraph at the beginning of the full catalogue or at the beginning of the filter family brochure.
Please, contact our Sales Department for further additional information.

Hydraulic symbols

Filter series	Style S	Style B
FMP 039	•	•

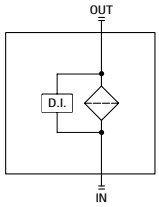

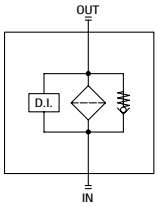

Pressure drop

Filter housings Δp pressure drop

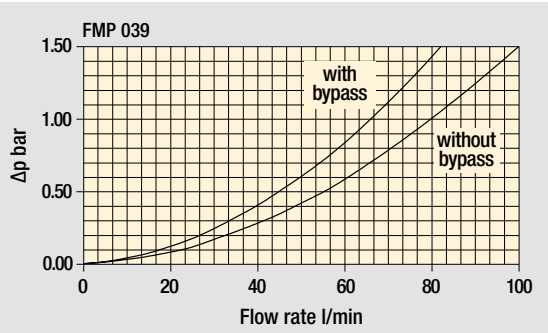

Bypass valve pressure drop

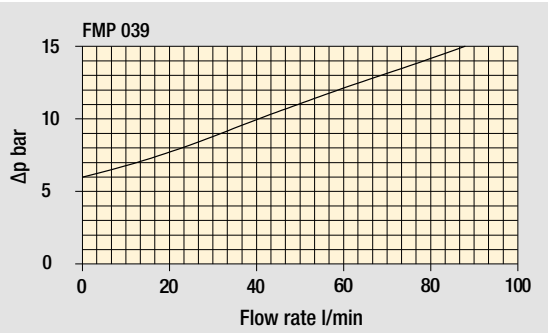

The curves are plotted using mineral oil with density of 0.86 kg/dm^3 in compliance with ISO 3968. Δp varies proportionally with density.

FMP 039

Designation & Ordering code

COMPLETE FILTER

Configuration example: FMP039 | 3 | B | A | B | 6 | A03 | N | P01

Series and size
FMP039

Length
2 | **3** | **4** |

Valves
S Without bypass
B With bypass 6 bar

Seals
A NBR
V FPM

Connections
A G 1/2”
B 1/2” NPT
C SAE 8 - 3/4” - 16 UNF

Connection for differential indicator
1 Without connections
6 With two connections on both sides

Filtration rating (filter media)

A03	Inorganic microfiber	3 µm	**A16**	Inorganic microfiber	16 µm
A06	Inorganic microfiber	6 µm	**A25**	Inorganic microfiber	25 µm
A10	Inorganic microfiber	10 µm	**M25**	Wire mesh	25 µm

Element Δp
N 20 bar

Execution
P01 MP Filtri standard
Pxx Customized

FILTER ELEMENT

Configuration example: HP039 | 3 | A03 | A | N | P01

Element series and size
HP039

Element length
2 | **3** | **4** |

Filtration rating (filter media)

A03	Inorganic microfiber	3 µm	**A16**	Inorganic microfiber	16 µm
A06	Inorganic microfiber	6 µm	**A25**	Inorganic microfiber	25 µm
A10	Inorganic microfiber	10 µm	**M25**	Wire mesh	25 µm

Seals
A NBR
V FPM

Element Δp
N 20 bar

Execution
P01 MP Filtri standard
Pxx Customized

CLOGGING INDICATORS

See page 622

DEA Electrical differential indicator
DEM Electrical differential indicator
DLA Electrical / visual differential indicator
DLE Electrical / visual differential indicator
DTA Electrical differential indicator
DVA Visual differential indicator
DVM Visual differential indicator
T2 Plug

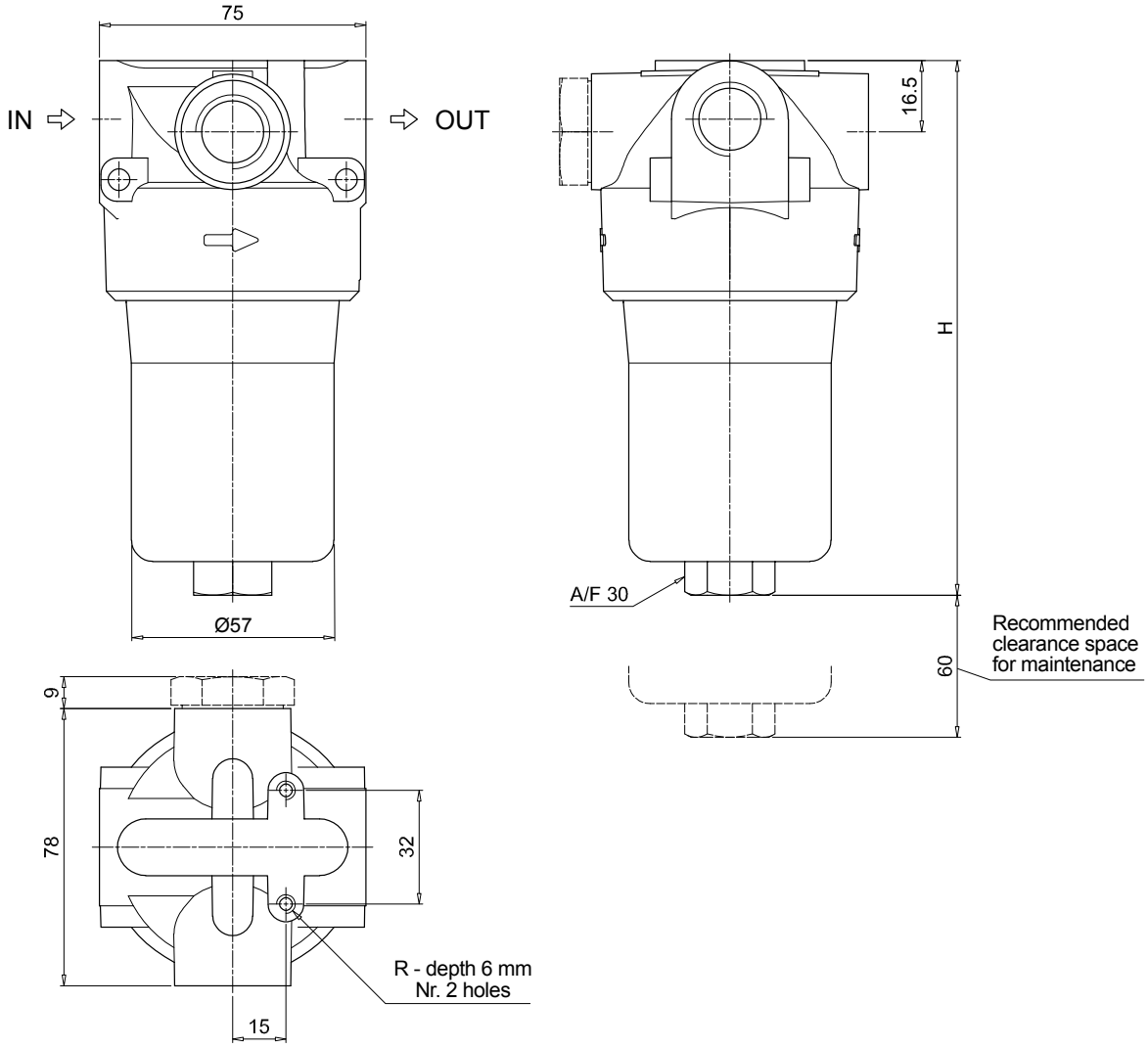

Version 1

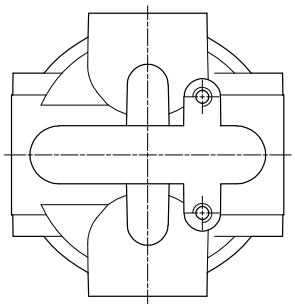

Version 6

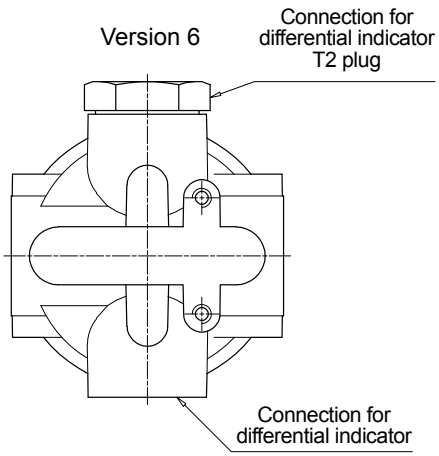

The position of the T2 plug is reversible

FMP039	
Filter length	**H [mm]**
2	151
3	194
4	238

Connections	R
A	M6
B - C	1/4" UNC

FMP 039 SPARE PARTS

Order number for spare parts

FMP 039

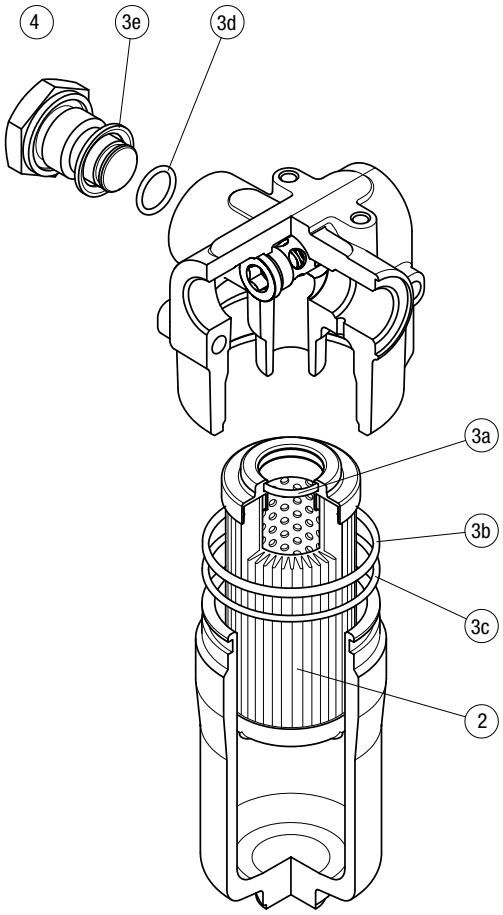

Item:	Q.ty: 1 pc. 2	Q.ty: 1 pc. 3 (3a ÷ 3e)	
Filter series	**Filter element**	**Seal Kit code number NBR**	**FPM**
FMP 039	See order table	02050509	02050510

Clogging indicators

Introduction

Filter elements are efficient only if their Dirt Holding Capacity is fully exploited. This is achieved by using filter housings equipped with clogging indicators.

These devices trip when the clogging of the filter element causes an increase in pressure drop across the filter element.

The indicator is set to alarm before the element becomes fully clogged.

MP Filtri can supply indicators of the following designs:

- **Vacuum switches and gauges**
- **Pressure switches and gauges**
- **Differential pressure indicators**

These type of devices can be provided with a visual, electrical or both signals.

Suitable indicator types

DIFFERENTIAL INDICATORS

Differential indicators are used on the Pressure line to check the efficiency of the filter element. They measure the pressure upstream and downstream of the filter element (differential pressure).
Standard items are produced with special connection G 1/2" size.
Also available in Stainless Steel models.

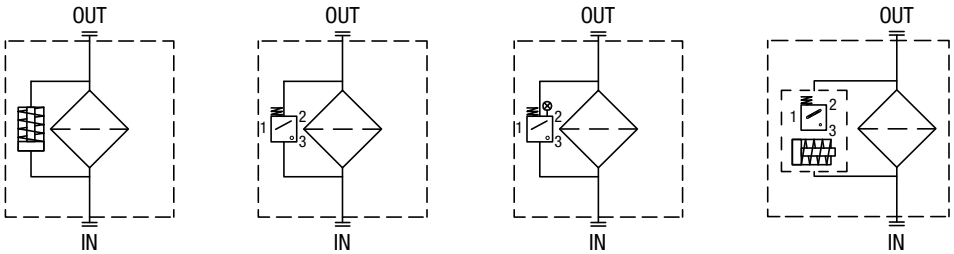

Quick reference guide

Filter family	Filter series		Visual indicators	Electrical indicators	Electrical / Visual indicators
HIGH PRESSURE FILTERS	With bypass valve 6 bar	FMP 039 - 065 - 135 - 320 FHP 010 - 011 - 065 - 135 - 350 - 351 - 500 FMMX 050 FMM 050 - 150 FHA 051 FHM 006 - 007 - 010 - 050 - 065 - 135 - 320 - 500 FHB 050 - 135 - 320 FHF 325 FHD 021 - 051 - 326 - 333	DVA50xP01 DVM50xP01	DEA50xA50P01 DEM50XX10P01 DEM50XX20P01 DEM50XX30P01 DEM50XX35P01 DTA50xF70P01 DEA70xA50P01 DEA95xA50P01	DLA50xA51P01 DLA50xA52P01 DLA50xA71P01 DLE50xA50P01 DLE50xF50P01
	Without bypass valve	FMP 039 - 065 - 135 - 320 FHP 010 - 011 - 065 - 135 - 350 - 351 - 500 FMMX 050 FMM 050 - 150 FHA 051 FHM 006 - 007 - 010 - 050 - 065 - 135 - 320 - 500 FHB 050 - 135 - 320 FHF 325 FHD 021 - 051 - 326 - 333	DVA70xP01 DVA95xP01 DVM70xP01 DVM95xP01	DEM70XX10P01 DEM70XX20P01 DEM70XX30P01 DEM70XX35P01 DEM95XX10P01 DEM95XX20P01 DEM95XX30P01 DEM95XX35P01 DTA70xF70P01 DTA95xF70P01	DLA70xA51P01 DLA70xA52P01 DLA70xA71P01 DLA95xA51P01 DLA95xA52P01 DLA95xA71P01 DLE70xA50P01 DLE70xF50P01 DLE95xA50P01 DLE95xF50P01

DEA*50

Electrical Differential Indicator

Settings	Ordering code
5.0 bar ±10%	DE A 50 x A 50 P01
7.0 bar ±10%	DE A 70 x A 50 P01
9.5 bar ±10%	DE A 95 x A 50 P01

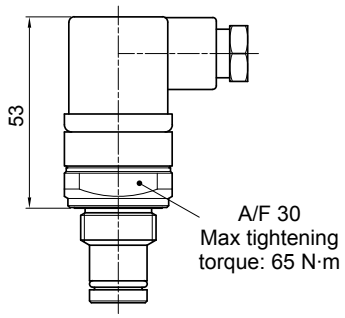

Hydraulic symbol

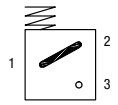

Electrical symbol

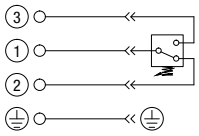

Materials
- Body: Brass
- Base: Black polyamide
- Contacts: Silver
- Seal: HNBR - FPM

Technical data
- Max working pressure: 420 bar
- Proof pressure: 630 bar
- Burst pressure: 1260 bar
- Working temperature: From -25 °C to +110 °C
- Compatibility with fluids: Mineral oils, Synthetic fluids HFA, HFB, HFC according to ISO 2943
- Degree protection: IP66 according to EN 60529 IP69K according to ISO 20653

Electrical data
- Electrical connection: EN 175301-803
- Resistive load: 0.2 A / 115 Vdc

DEM*10

Electrical Differential Indicator

Settings	Ordering code
5.0 bar ±10%	DE M 50 x x 10 P01
7.0 bar ±10%	DE M 70 x x 10 P01
9.5 bar ±10%	DE M 95 x x 10 P01

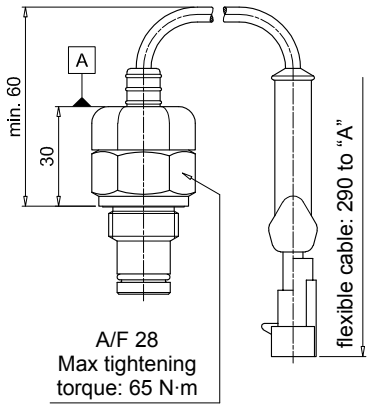

Hydraulic symbol

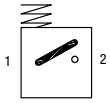

Electrical symbol

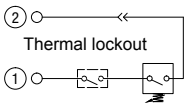

Materials
- Body: Brass
- Base: Black polyamide
- Contacts: Silver
- Seal: HNBR - FPM

Technical data
- Max working pressure: 420 bar
- Proof pressure: 630 bar
- Burst pressure: 1260 bar
- Working temperature: From -25 °C to +110 °C
- Compatibility with fluids: Mineral oils, Synthetic fluids HFA, HFB, HFC according to ISO 2943
- Degree protection: IP66 according to EN 60529

Electrical data
- Electrical connection: AMP Superseal series 1.5
- Resistive load: 0.2 A / 115 Vdc
- Switching type: Normally open contacts (NC on request)
- Thermal lockout: Normally open up to 30 °C (option "F")

DEM*20

Electrical Differential Indicator

Settings	Ordering code
5.0 bar ±10%	DE M 50 x x 20 P01
7.0 bar ±10%	DE M 70 x x 20 P01
9.5 bar ±10%	DE M 95 x x 20 P01

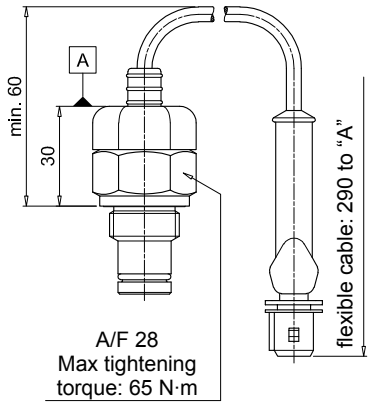

Hydraulic symbol

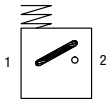

Electrical symbol

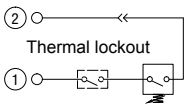

Materials
- Body: Brass
- Base: Black polyamide
- Contacts: Silver
- Seal: HNBR - FPM

Technical data
- Max working pressure: 420 bar
- Proof pressure: 630 bar
- Burst pressure: 1260 bar
- Working temperature: From -25 °C to +110 °C
- Compatibility with fluids: Mineral oils, Synthetic fluids HFA, HFB, HFC according to ISO 2943
- Degree protection: IP66 according to EN 60529

Electrical data
- Electrical connection: AMP Time junior
- Resistive load: 0.2 A / 115 Vdc
- Switching type: Normally open contacts (NC on request)
- Thermal lockout: Normally open up to 30 °C (option "F")

Dimensions

DEM*30

Electrical Differential Indicator

Settings	Ordering code
5.0 bar ±10%	DE M 50 x x 30 P01
7.0 bar ±10%	DE M 70 x x 30 P01
9.5 bar ±10%	DE M 95 x x 30 P01

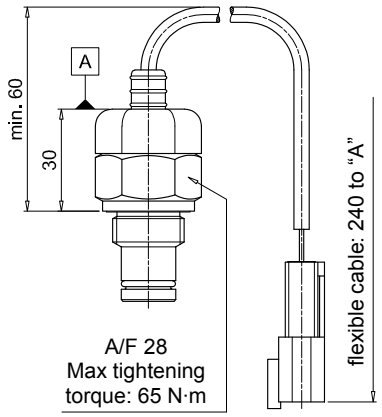

Hydraulic symbol

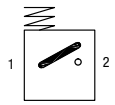

Electrical symbol

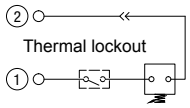

Materials
- Body: Brass
- Base: Black polyamide
- Contacts: Silver
- Seal: HNBR - FPM

Technical data
- Max working pressure: 420 bar
- Proof pressure: 630 bar
- Burst pressure: 1260 bar
- Working temperature: From -25 °C to +110 °C
- Compatibility with fluids: Mineral oils, Synthetic fluids HFA, HFB, HFC according to ISO 2943
- Degree protection: IP66 according to EN 60529

Electrical data
- Electrical connection: Deutsch DT-04-2-P
- Resistive load: 0.2 A / 115 Vdc
- Switching type: Normally open contacts (NC on request)
- Thermal lockout: Normally open up to 30 °C (option "F")

DEM*35

Electrical Differential Indicator

Settings	Ordering code
5.0 bar ±10%	DE M 50 x x 35 P01
7.0 bar ±10%	DE M 70 x x 35 P01
9.5 bar ±10%	DE M 95 x x 35 P01

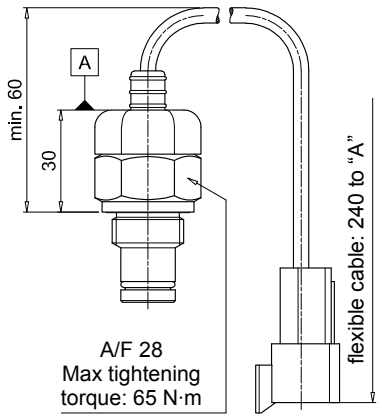

Hydraulic symbol

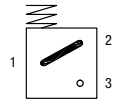

Electrical symbol

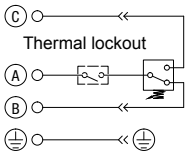

Materials
- Body: Brass
- Base: Black polyamide
- Contacts: Silver
- Seal: HNBR - FPM

Technical data
- Max working pressure: 420 bar
- Proof pressure: 630 bar
- Burst pressure: 1260 bar
- Working temperature: From -25 °C to +110 °C
- Compatibility with fluids: Mineral oils, Synthetic fluids HFA, HFB, HFC according to ISO 2943
- Degree protection: IP66 according to EN 60529

Electrical data
- Electrical connection: Deutsch DT-04-3-P
- Resistive load: 0.2 A / 115 Vdc
- Switching type: SPDT contact
- Thermal lockout: Normally open up to 30 °C (option "F")

DLA*51 - DLA*52

Electrical/Visual Differential Indicator

Settings	Ordering code
5.0 bar ±10%	DL A 50 x A xx P01
7.0 bar ±10%	DL A 70 x A xx P01
9.5 bar ±10%	DL A 95 x A xx P01

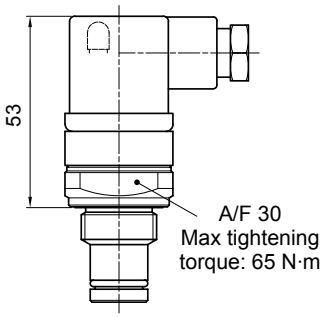

Hydraulic symbol

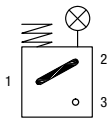

Electrical symbol

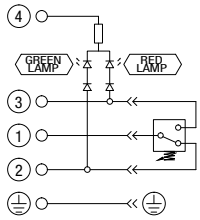

Materials
- Body: Brass
- Base: Transparent polyamide
- Contacts: Silver
- Seal: HNBR - FPM

Technical data
- Max working pressure: 420 bar
- Proof pressure: 630 bar
- Burst pressure: 1260 bar
- Working temperature: From -25 °C to +110 °C
- Compatibility with fluids: Mineral oils, Synthetic fluids HFA, HFB, HFC according to ISO 2943
- Degree protection: IP66 according to EN 60529 IP69K according to ISO 20653

Electrical data

- Electrical connection:	EN 175301-803	
- Type	51	52
- Lamps	24 Vdc	110 Vdc
- Resistive load:	1 A / 24 Vdc	1 A / 110 Vdc

DLA*71

Electrical/Visual Differential Indicator

Settings	Ordering code
5.0 bar ±10%	DL A 50 x A 71 P01
7.0 bar ±10%	DL A 70 x A 71 P01
9.5 bar ±10%	DL A 95 x A 71 P01

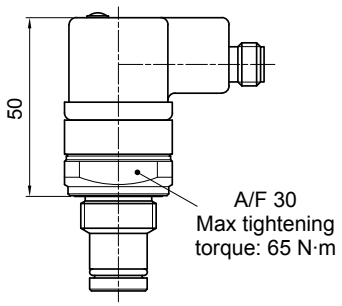

Hydraulic symbol

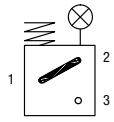

Electrical symbol

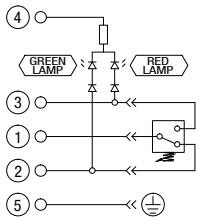

Materials
- Body: Brass
- Base: Black polyamide
- Contacts: Silver
- Seal: HNBR - FPM

Technical data
- Max working pressure: 420 bar
- Proof pressure: 630 bar
- Burst pressure: 1260 bar
- Working temperature: From -25 °C to +110 °C
- Compatibility with fluids: Mineral oils, Synthetic fluids HFA, HFB, HFC according to ISO 2943
- Degree protection: IP65 according to EN 60529 IP69K according to ISO 20653

Electrical data
- Electrical connection: IEC 61076-2-101 D (M12)
- Lamps 24 Vdc
- Resistive load: 0.4 A / 24 Vdc

DLE*A50

Electrical/Visual Differential Indicator

Settings	Ordering code
5.0 bar ±10%	DL E 50 x A 50 P01
7.0 bar ±10%	DL E 70 x A 50 P01
9.5 bar ±10%	DL E 95 x A 50 P01

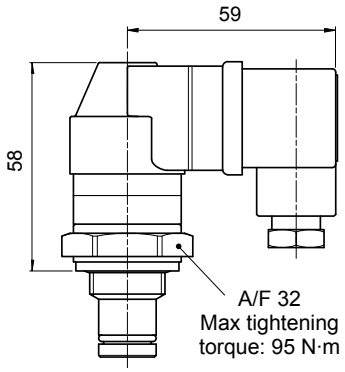

Hydraulic symbol

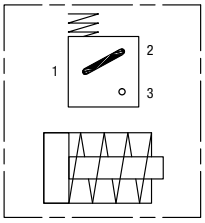

Electrical symbol

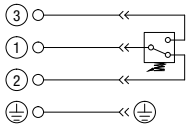

Materials
- Body: Brass
- Base: Black polyamide
- Contacts: Silver
- Seal: HNBR - FPM

Technical data
- Max working pressure: 420 bar
- Proof pressure: 630 bar
- Burst pressure: 1260 bar
- Working temperature: From -25 °C to +110 °C
- Compatibility with fluids: Mineral oils, Synthetic fluids HFA, HFB, HFC according to ISO 2943
- Degree protection: IP65 according to EN 60529

Electrical data
- Electrical connections: EN 175301-803
- Resistive load: 5 A / 250 Vac
- Available the connector with lamps

DLE*F50

Electrical/Visual Differential Indicator

Settings	Ordering code
5.0 bar ±10%	DL E 50 x F 50 P01
7.0 bar ±10%	DL E 70 x F 50 P01
9.5 bar ±10%	DL E 95 x F 50 P01

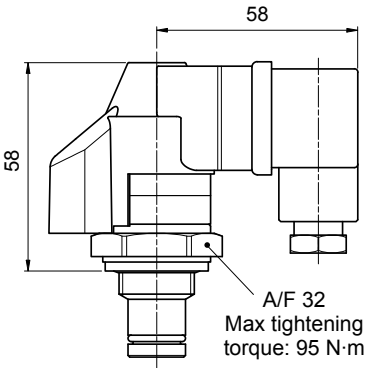

Hydraulic symbol

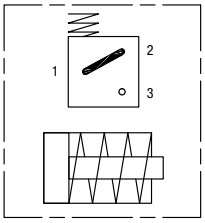

Electrical symbol

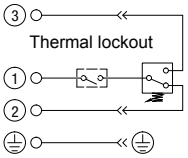

Materials
- Body: Brass
- Base: Black polyamide
- Contacts: Silver
- Seal: HNBR - FPM

Technical data
- Max working pressure: 420 bar
- Proof pressure: 630 bar
- Burst pressure: 1260 bar
- Working temperature: From -25 °C to +110 °C
- Compatibility with fluids: Mineral oils, Synthetic fluids HFA, HFB, HFC according to ISO 2943
- Degree protection: IP65 according to EN 60529

Electrical data
- Electrical connections: EN 175301-803
- Resistive load: 5 A / 250 Vac
- Thermal lockout setting: +30 °C

Dimensions

DTA*70

Electrical Differential Indicator

Settings	Ordering code
5.0 bar ±10%	DT A 50 x x 70 P01
7.0 bar ±10%	DT A 70 x x 70 P01
9.5 bar ±10%	DT A 95 x x 70 P01

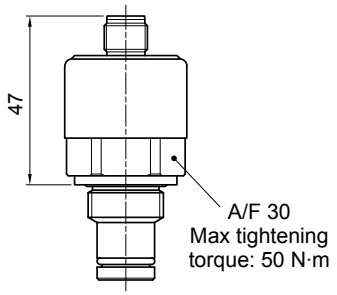

Hydraulic symbol

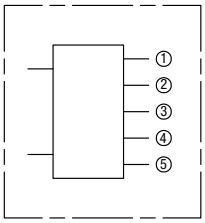

Electrical symbol

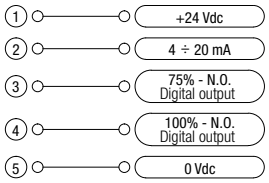

Materials
- Body: Brass
- Internal parts: Brass - Polyamide
- Contacts: Silver
- Seal: HNBR - FPM

Industry 4.0 READY

Technical data
- Max working pressure: 420 bar
- Proof pressure: 630 bar
- Burst pressure: 1260 bar
- Compatibility with fluids: Mineral oils, Synthetic fluids HFA, HFB, HFC according to ISO 2943
- Degree protection: IP67 according to EN 60529

Electrical data
- Electrical connection: IEC 61076-2-101 D (M12)
- Power supply: 24 Vdc
- Analogue output: From 4 to 20 mA
- Thermal lockout: 30 °C (all output signals stalled up to 30 °C)

DVA

Visual Differential Indicator

Settings	Ordering code
5.0 bar ±10%	DV A 50 x P01
7.0 bar ±10%	DV A 70 x P01
9.5 bar ±10%	DV A 95 x P01

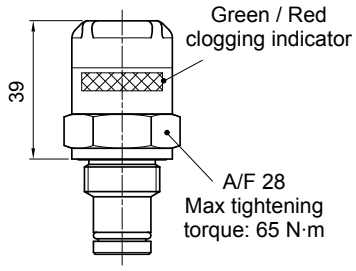

Hydraulic symbol

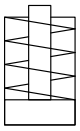

Materials
- Body: Brass
- Internal parts: Brass - Polyamide
- Contacts: Silver
- Seal: HNBR - FPM

Technical data
- Reset: Automatic reset
- Max working pressure: 420 bar
- Proof pressure: 630 bar
- Burst pressure: 1260 bar
- Working temperature: From -25 °C to +110 °C
- Compatibility with fluids: Mineral oils, Synthetic fluids HFA, HFB, HFC according to ISO 2943
- Degree protection: IP65 according to EN 60529

DVM

Visual Differential Indicator

Settings	Ordering code
5.0 bar ±10%	DV M 50 x P01
7.0 bar ±10%	DV M 70 x P01
9.5 bar ±10%	DV M 95 x P01

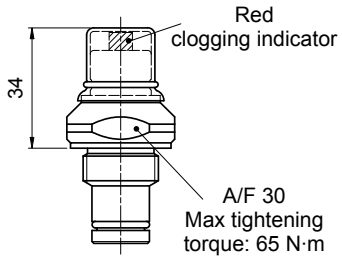

Hydraulic symbol

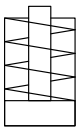

Materials
- Body: Brass
- Internal parts: Brass - Polyamide
- Contacts: Silver
- Seal: HNBR - FPM

Technical data
- Reset: Manual reset
- Max working pressure: 420 bar
- Proof pressure: 630 bar
- Burst pressure: 1260 bar
- Working temperature: From -25 °C to +110 °C
- Compatibility with fluids: Mineral oils, Synthetic fluids HFA, HFB, HFC according to ISO 2943
- Degree protection: IP65 according to EN 60529

T2

Indicator plug

Seal	Ordering code
HNBR	T2 H
FPM	T2 V

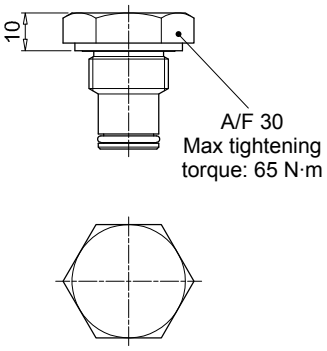

Materials

- Body: Phosphatized steel
- Seal: HNBR / FPM

DIFFERENTIAL INDICATORS

Designation & Ordering code

DESIGNATION & ORDERING CODE - DIFFERENTIAL INDICATORS

Configuration example 1:	DE	M	50	H	F	35	P01
Configuration example 2:	DE	H	50	F	A	70	P01
Configuration example 3:	DL	E	70	V	A	50	P01
Configuration example 4:	DT	A	50	H	F	70	P01
Configuration example 5:	DV	M	95	V			P01

Series

DE	Electrical differential indicator
DL	Electrical / Visual differential indicator
DT	Electrical differential indicator
DV	Visual differential indicator

Type	DE	DL	DT
A Standard type	•	•	•
M With wired electrical connection	•	-	-
E For high power supply	-	•	-

DV	
A	With automatic reset
M	With manual reset

Pressure setting	DEA	DEM	DLA	DLE	DT	DV
50 5 bar	•	•	•	•	•	•
70 7 bar	•	•	•	•	•	•
95 9.5 bar	•	•	•	•	•	•

Seals	DEA	DEM	DLA	DLE	DT	DV
F MFQ	-	-	-	-	-	-
H HNBR	•	•	•	•	•	•
V FPM	•	•	•	•	•	•

Thermostat	DEA	DEM	DLA	DLE	DT	DV
A Without thermostat	•	•	•	•	-	-
F With thermostat	-	•	-	•	•	-

Electrical connections	DEA	DEM	DLA	DLE	DT	DV
10 Connection AMP Superseal series 1.5	-	•	-	-	-	-
20 Connection AMP Timer Junior	-	•	-	-	-	-
30 Connection Deutsch DT-04-2-P	-	•	-	-	-	-
35 Connection Deutsch DT-04-3-P	-	•	-	-	-	-
48 Connection via three-core cable - fitting M20x1.5	-	-	-	-	-	-
49 Connection via four-core cable - fitting 1/2" NPT	-	-	-	-	-	-
50 Connection EN 175301-803	•	-	-	•	-	-
51 Connection EN 175301-803, transparent base with lamps 24 Vdc	-	-	•	-	-	-
52 Connection EN 175301-803, transparent base with lamps 110 Vdc	-	-	•	-	-	-
70 Connection IEC 61076-2-101 D (M12)	-	-	-	-	•	-
71 Connection IEC 61076-2-101 D (M12), black base with lamps 24 Vdc	-	-	•	-	-	-

Option

P01	MP Filtri standard
Pxx	Customized

DESIGNATION & ORDERING CODE - DIFFERENTIAL INDICATOR PLUG

Configuration example	T2	H

Series

T2	Indicator plug

Seals

H	HNBR
V	FPM